Vitesse max : 4000 trs/min
Charge radiale max : 15000N a 400trs/min
Charge axiale max : 1800N a 400trs/min
Charge radiale max : 1500N a 4000trs/min
Charge axiale max : 180N a 4000trs/min
Equilibrage avec demi-clavette.

Partie active : HKW 310-500HBU
Resolveur : CB102
Protection : IP40
Peinture : Noir RAL9005
Masse : 695kgs

Connecteur resolveur 12 pts

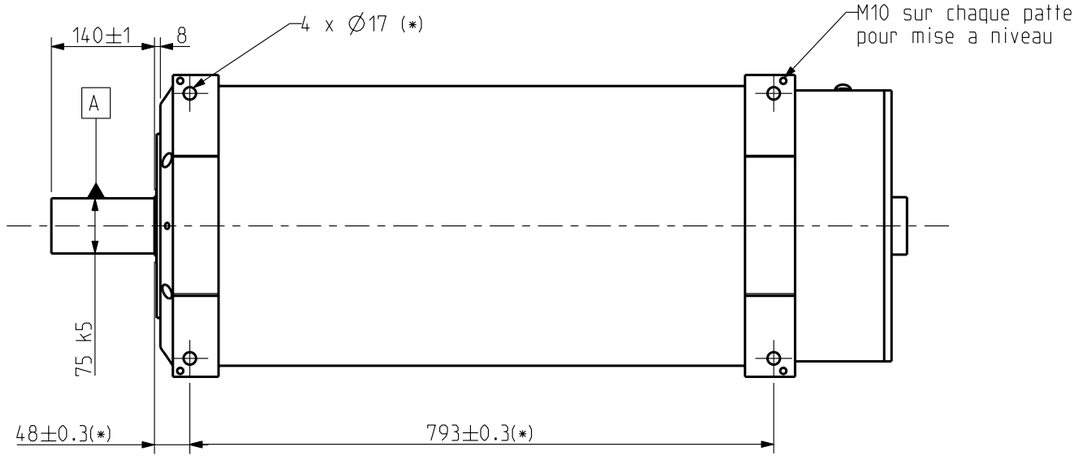

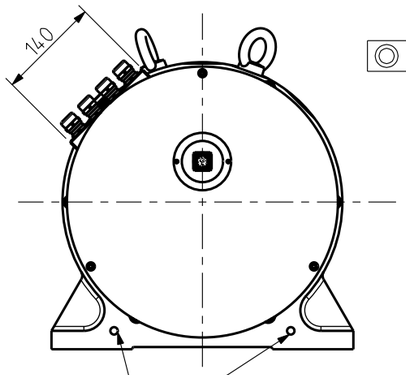

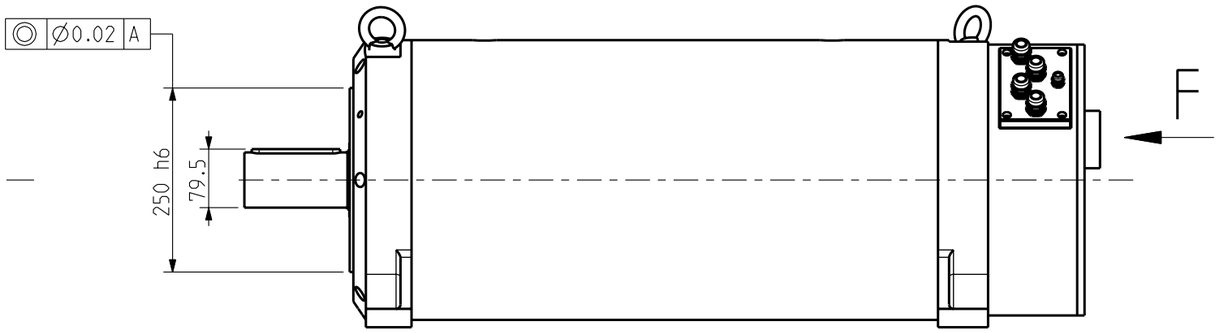

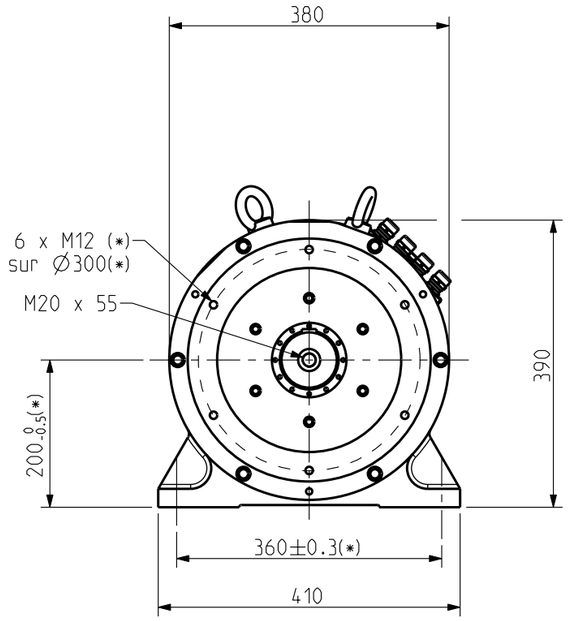

2 x M12 prof20
pour raccordement
tresse de masse sur bati

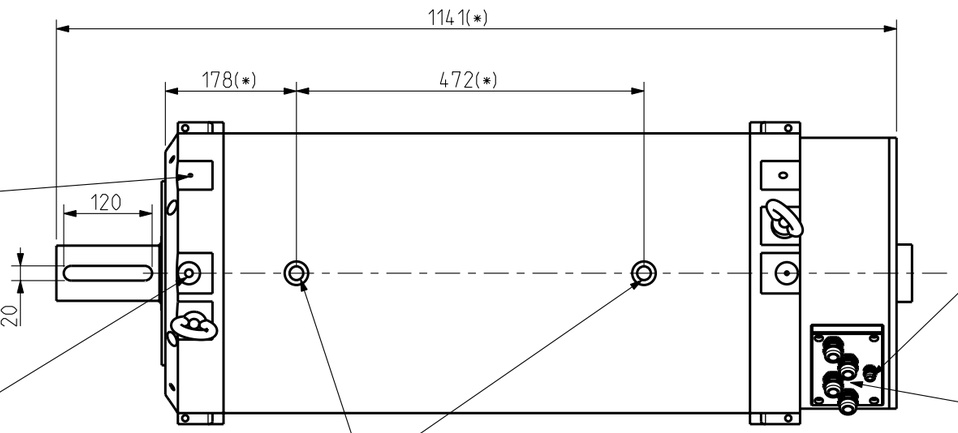

M12x1.5 Prof12
Avant et Arriere
pour sonde temperature roulement
(sonde non fournie)

M6x1 Prof12
Avant et Arriere
pour capteur vibration
(capteur non fourni)

Entree/Sortie
eau additivee pour refroidissement
G1/2 lame 32

Sortie sondes sous gaine :
Longueur : 1.2m
KTY + : marron
KTY - : blanc
PTC 150°C : jaune
PTC 150°C : jaune

Sortie puissance fils 50mm²
Ø12.3 sur gaine
rayon de courbure mini 140mm
longueur : 1.2m
PE M20
Noir : phase U
Blanc : phase V
Rouge : phase W
Vert/jaune : masse

CONNECTEUR COMMANDE

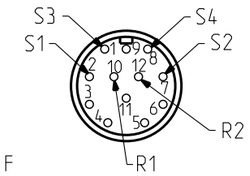

Vue suivant F

Plan valable pour : MGVB50H__AB3LR1005

Masse :	General tolerances	Dessine	19/01/12	AH	Vise		
		Modifications	B	AM23909 - 16/07/2012 PF			
	DIN ISO 2768 mK		A	AM 23780 25/01/12 AH			

Ce document, propriete exclusive de PARVEX, ne peut etre communique, copie ou reproduit totalement ou partiellement sans son autorisation ecrite.

Echelle 0.120

Parker
8 Avenue du lac. BP30749
21007-DIJON cedex-FRANCE
www.parker.com

MGVB50

ENCOMBREMENT

Format	F	E	S	G	I	
A3	x					

344751E1005 B

Resolver : CB52
IP40
Paint : Black RAL 9005

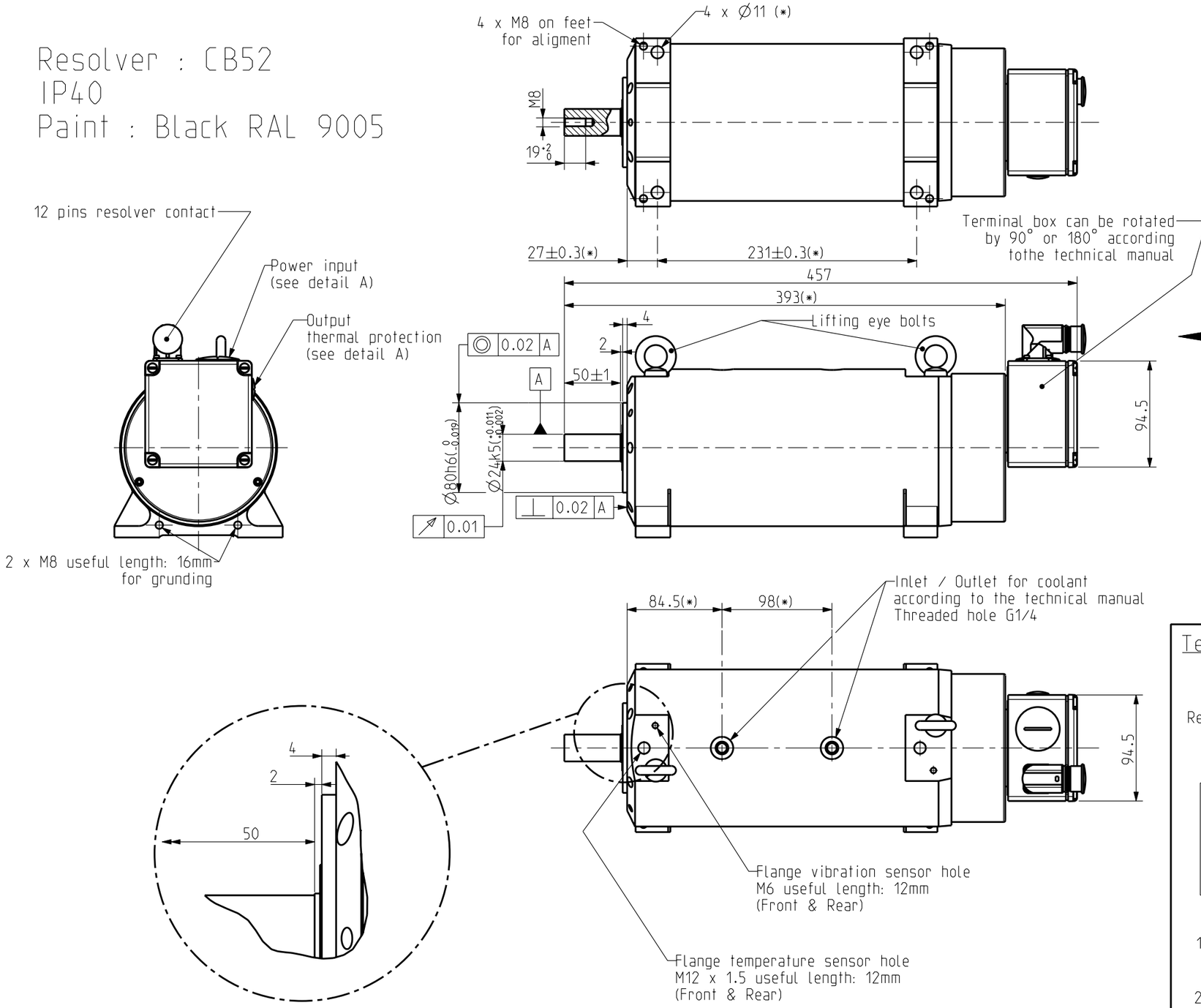

RESOLVER CONNECTOR

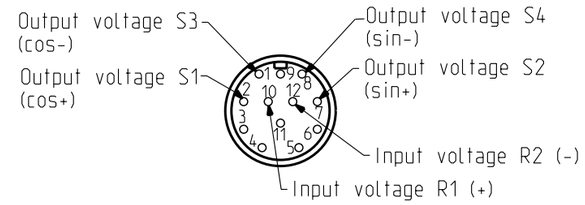

F VIEW

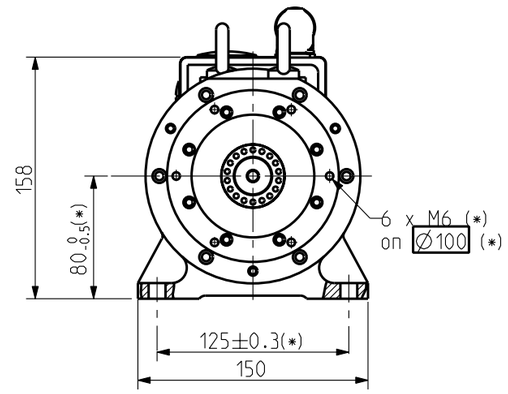

Terminal box

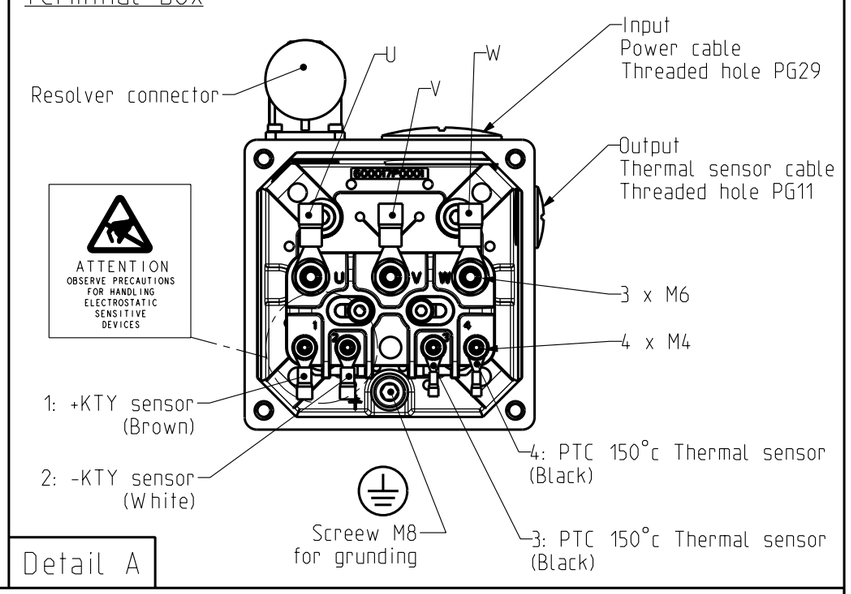

Detail A

(*) Dimensions checked for acceptance certificate

Drawing valid for : MGV430

Weight : 35kg

This document is the property of PARKER.Transmission as well as reproduction or copy is not permitted without written authorisation.

General tolerances
DIN ISO 2768 mK

Drawn	02/04/2012	PF	Visa		
Modifications	C	AM24040 - 23/01/2013 PF			
	B	AM23964 - 27/09/2012 PF			
	A	AM23841 - 11/04/12 OD	D	AM24091 - 09/04/2013 PF	

Scale 1:4

Parker
8 Avenue du lac. BP30749
21007-DIJON cedex-FRANCE
www.parker.com

MGV430

OUTLINE DRAWING

Format	F	E	S	G	I	
A3		x				

345259E6000 D

Resolver : CB52
IP40
Paint : Black RAL 9005

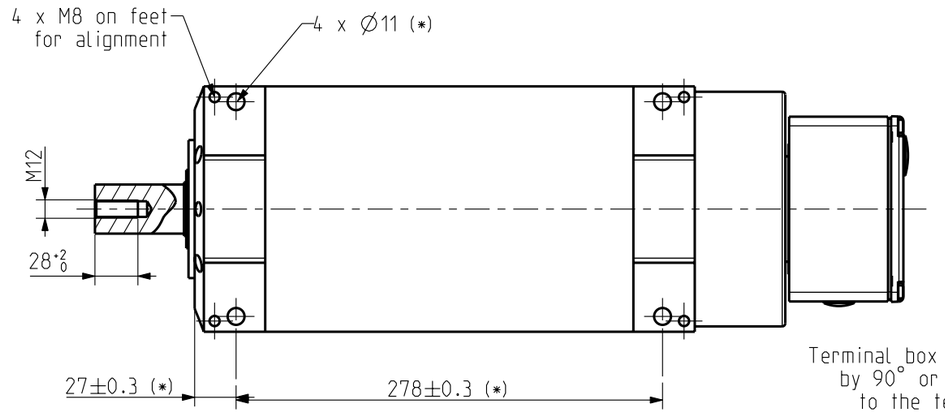

RESOLVER CONNECTOR

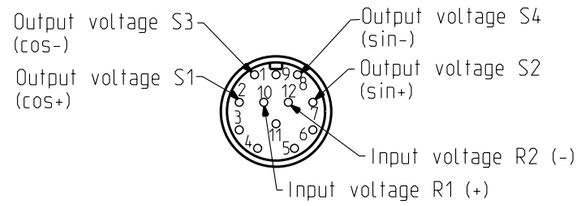

F VIEW

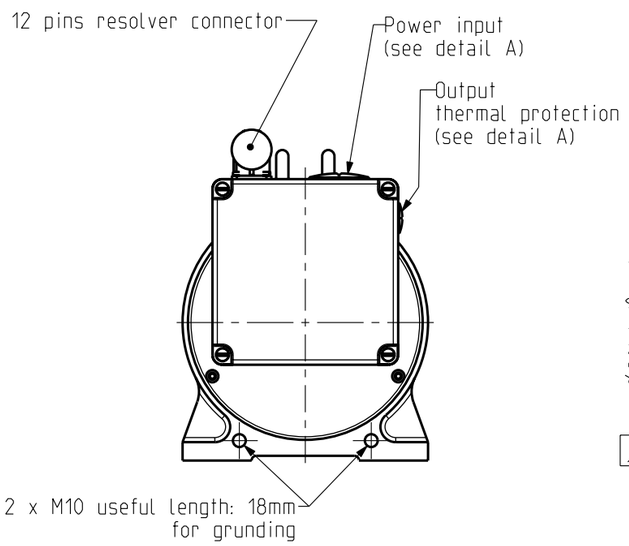

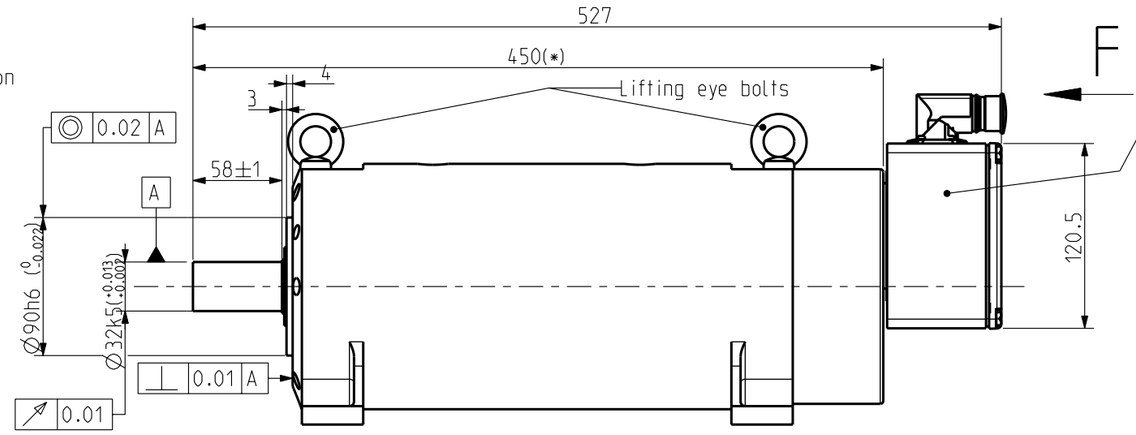

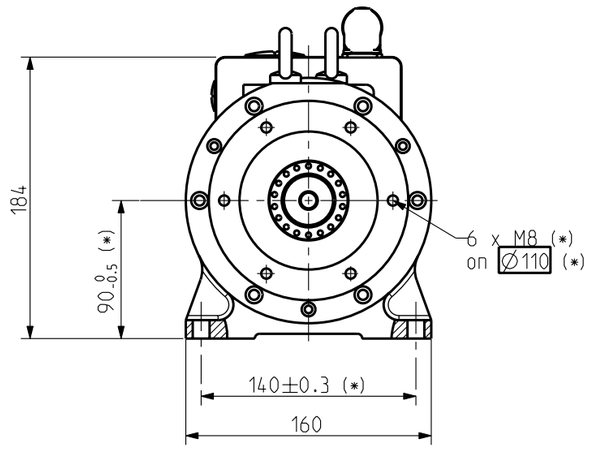

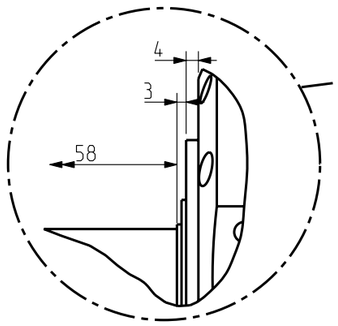

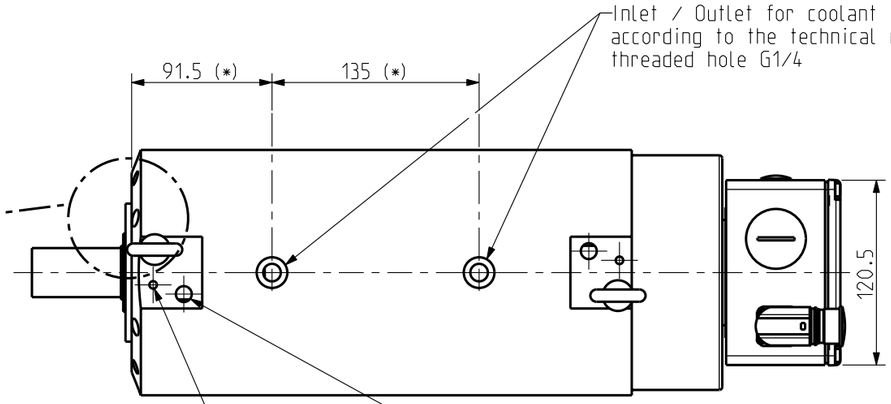

(*) Dimensions checked for acceptance certificate

Terminal box

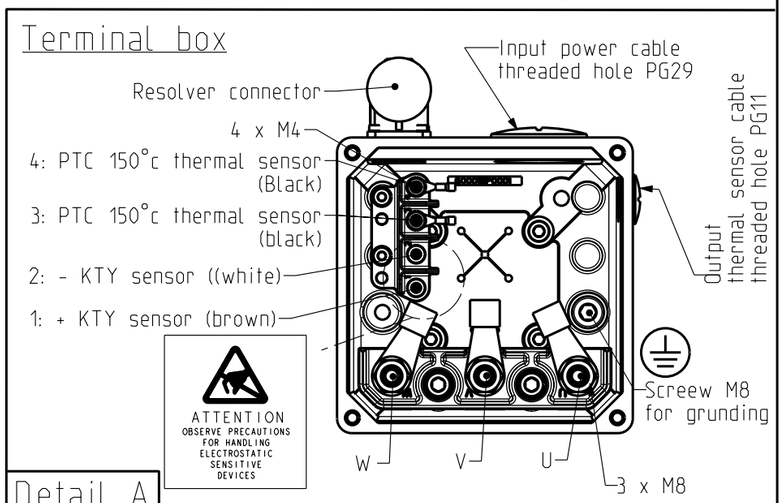

Detail A

Drawing valid for : MGV635

Weight : 55 kg	General tolerances DIN ISO 2768 mK	Drawn	13/03/2012	PF	Visa					Scale 1:4	Parker
		Modifications	C	AM24091 - 09/04/2013 PF							8 Avenue du lac. BP30749 21007-DIJON cedex-FRANCE www.parker.com
			B	AM24040 - 23/01/2013 PF							
			A	AM23841 - 11/04/12 OD							

This document is the property of PARKER.Transmission as well as reproduction or copy is not permitted without written authorisation.

MGV635

OUTLINE DRAWING

Format	F	E	S	G	I
A3		x			

345261E6000 C

Resolver : CB52
IP40
Paint : Black RAL 9005

Illustrated version with terminal box type F2

(*) Dimensions checked for acceptance certificate

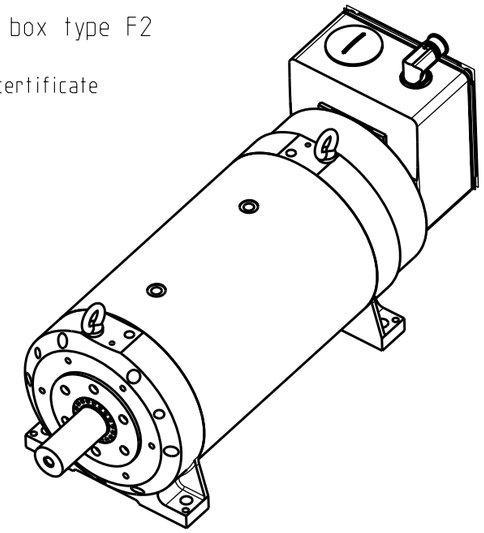

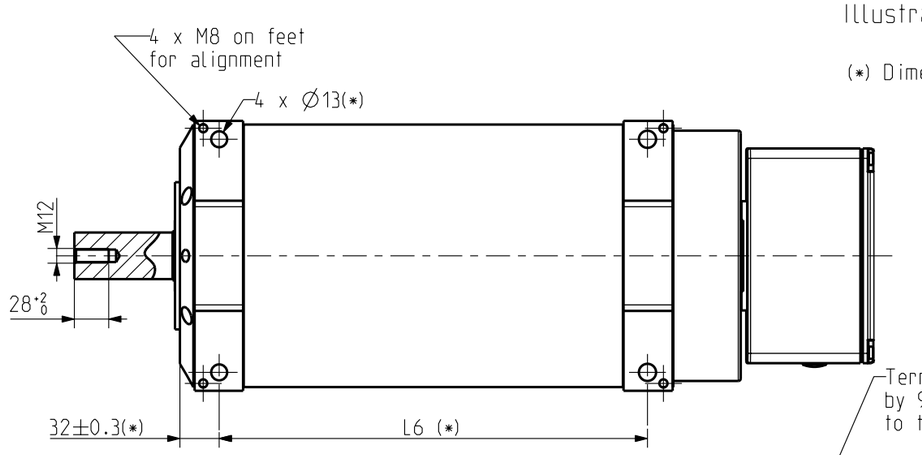

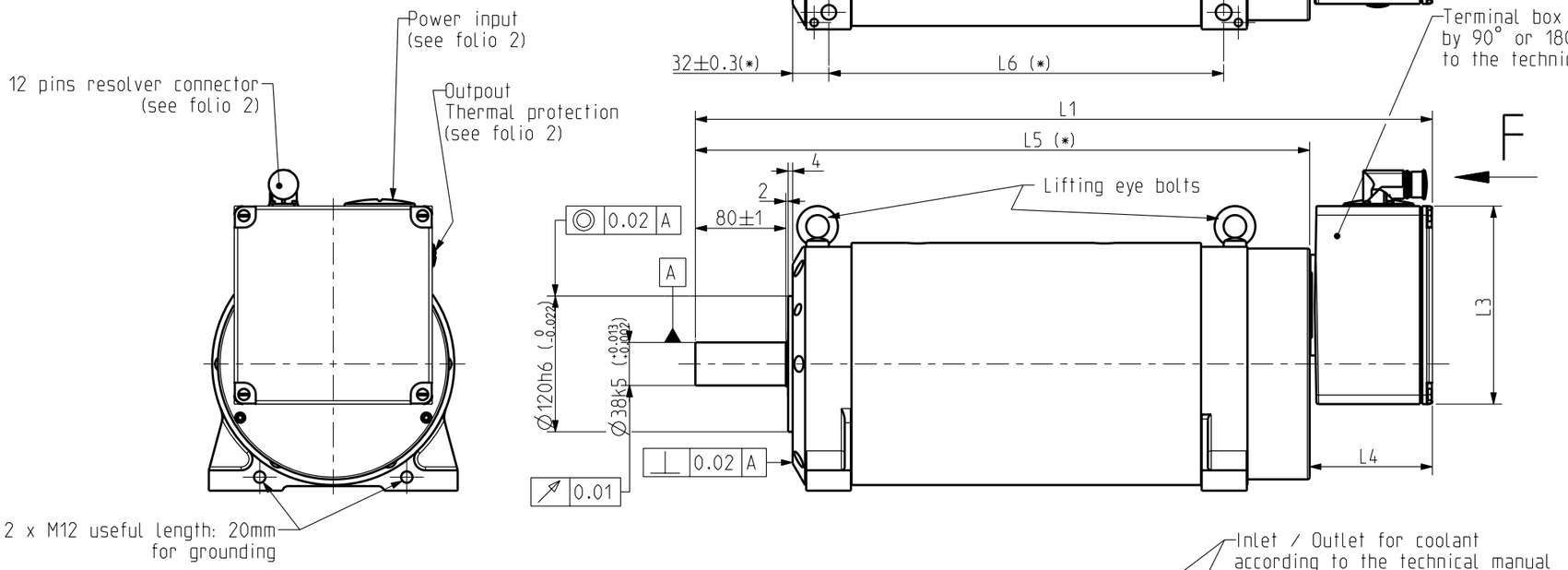

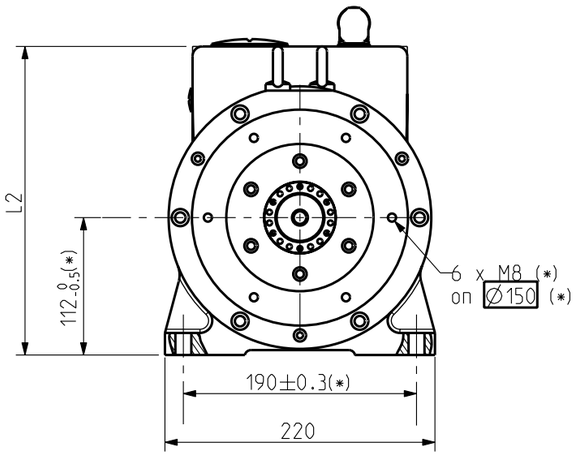

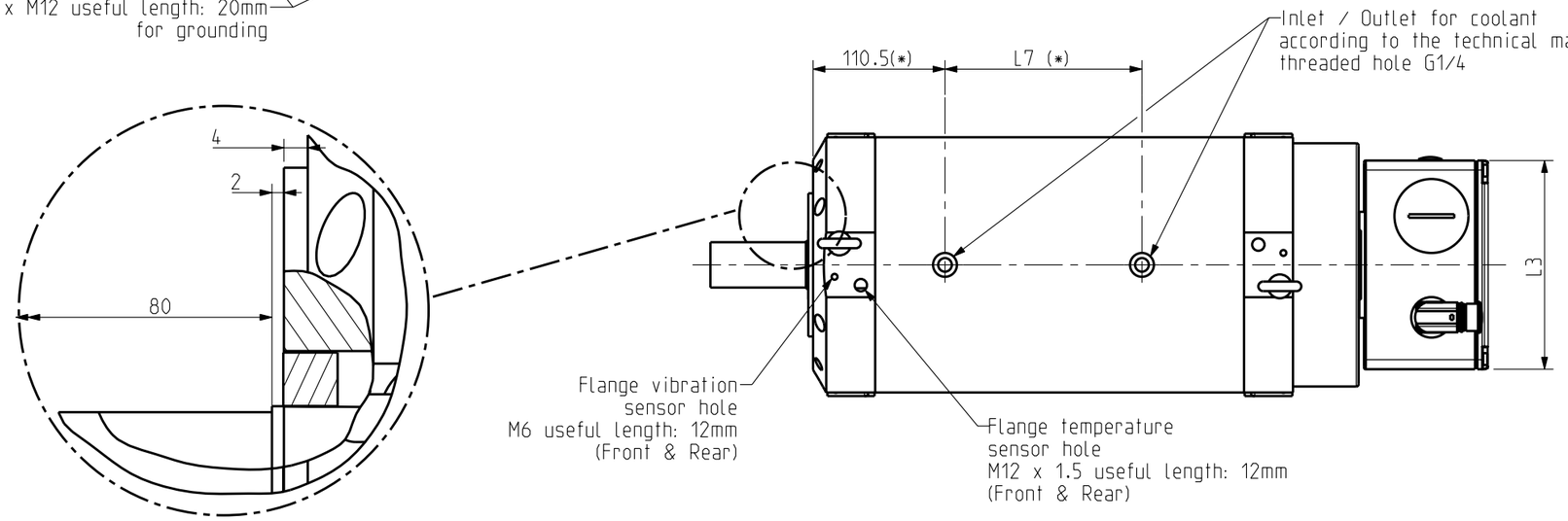

Motor	L1	L2	L3	L4	L5	L6	L7	Terminal box	Weight
MGV840CAR/CAP/CAH	620	225	121	77	543	349	165	SEE FOLIO 2	115 Kg
MGV840CAF/CAD	652	252	175	109					
MGV860CBE/CBD	727	252	175	109	618	426	245		135 Kg

Drawing valid for : MGV840 / MGV860

Weight :

This document is the property of PARKER.Transmission as well as reproduction or copy is not permitted without written authorisation.

General tolerances
DIN ISO 2768 mK

Drawn	22/02/2012	PF	Visa		
Modifications	C	AM24040 - 23/01/2013 PF			
	B	AM23888 - 21/06/2012 PF	E	AM24550 - 02/06/2016 PF	
	A	AM23841 - 11/04/12 OD	D	AM24091 - 09/04/2013 PF	

Scale 1:2

Parker
8 Avenue du lac. BP30749
21007-DIJON cedex-FRANCE
www.parker.com

MGV840

OUTLINE DRAWING

Format	F	E	S	G	I
A3		x			

345263E6000 E

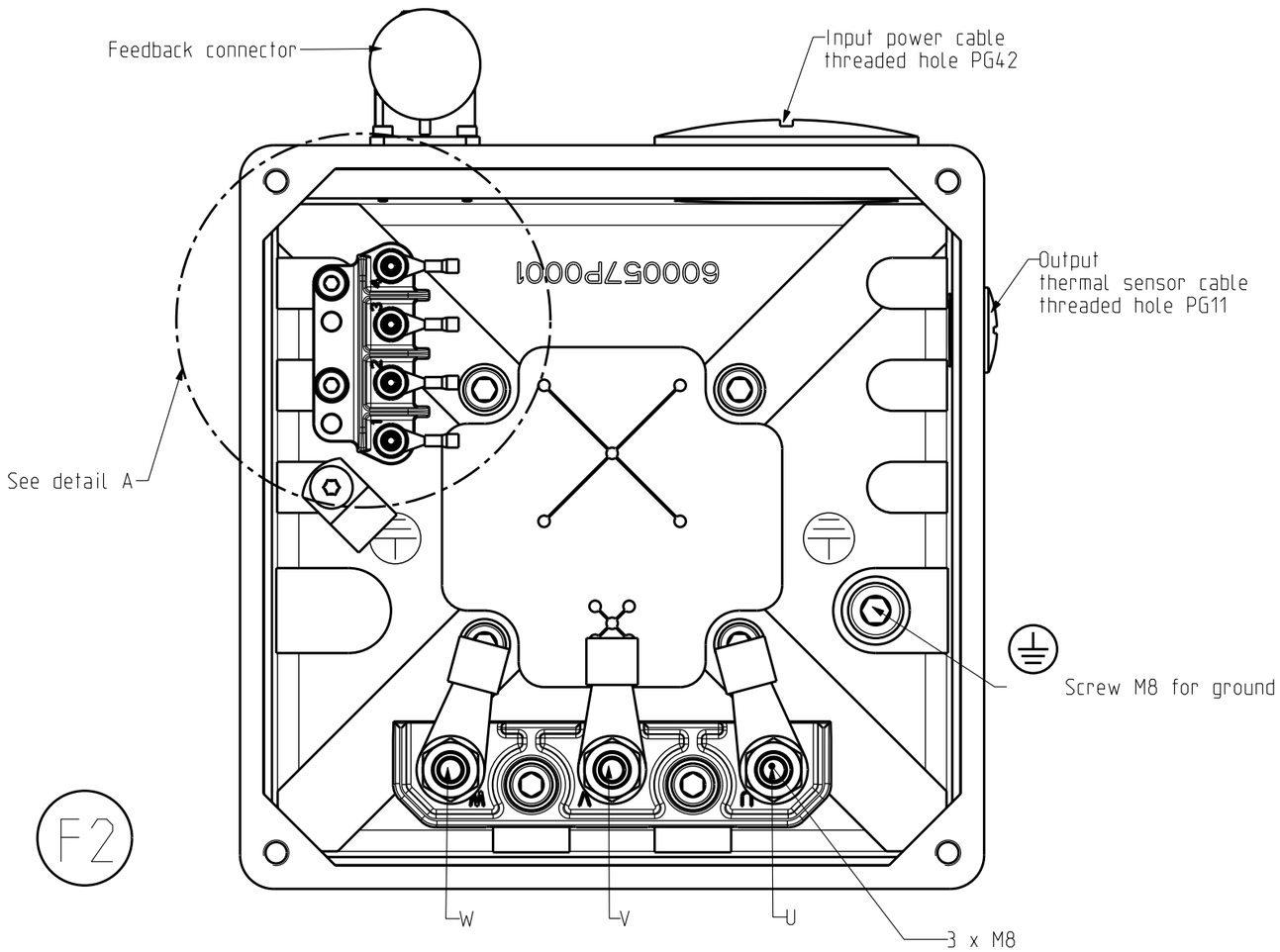

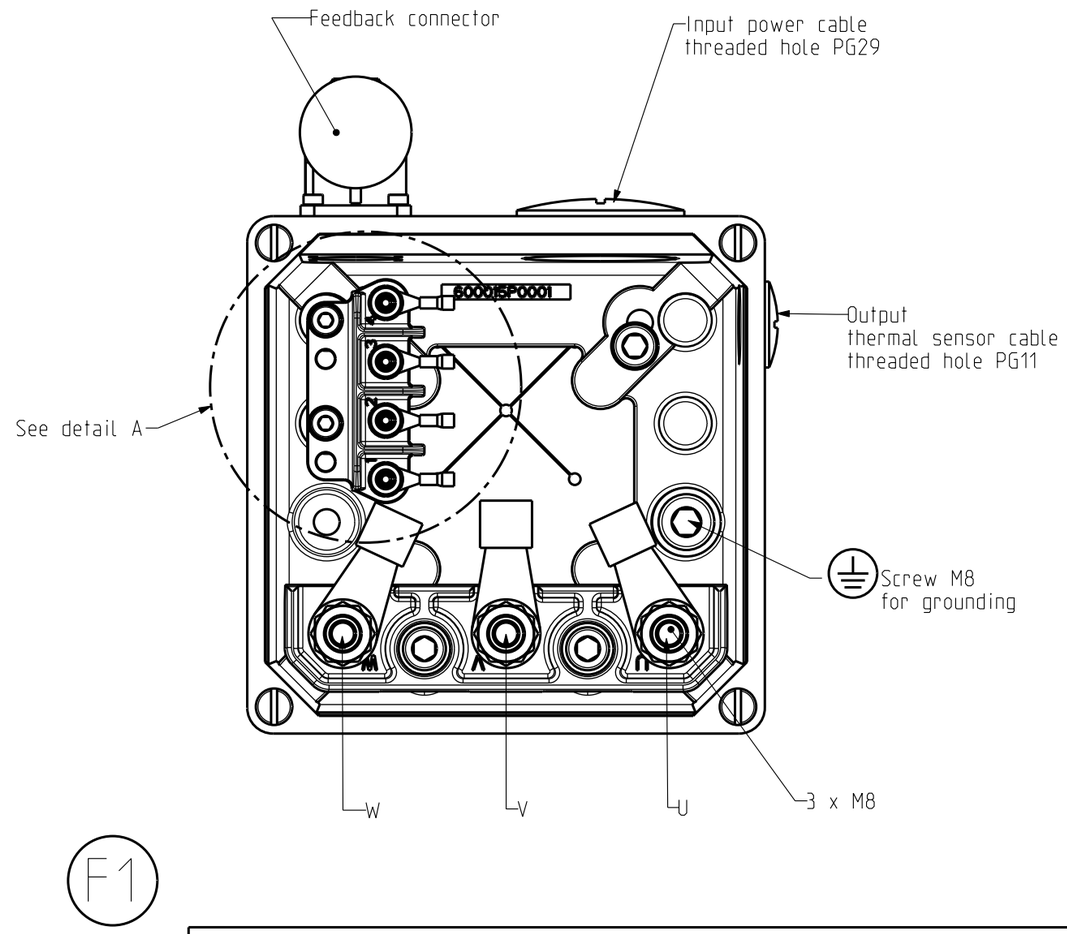

Detail A

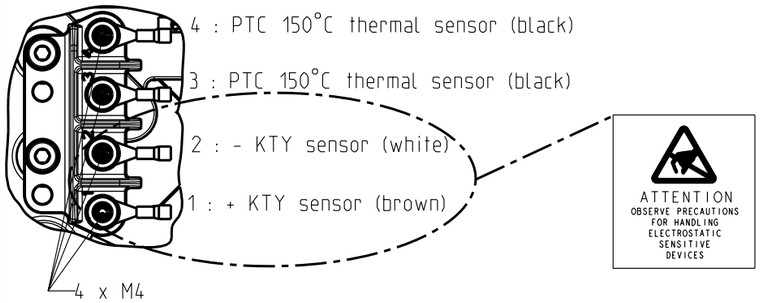

RESOLVER CONNECTOR

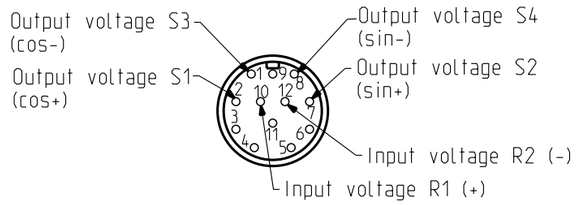

F VIEW (see folio 1)

Motor type	Active part	Terminal box
MGV840CAR/CAP/CAH	HKW155_160CAR/CAP/CAH	F1
MGV840CAF/CAD	HKW155_160CAF/CAD	F2
MGV860CBE/CBD	HKW155_240CBE/CBD	F2

Drawing valid for : MGV840 / MGV860

Weight :

This document is the property of PARKER.Transmission as well as reproduction or copy is not permitted without written authorisation.

General tolerances
DIN ISO 2768 mK

Drawn	22/02/2012	PF	Visa		
Modifications	C	AM24040 - 23/01/2013 PF			
	B	AM23888 - 21/06/2012 PF	E	AM24550 - 02/06/2016 PF	
	A	AM23841 - 11/04/12 OD	D	AM24091 - 09/04/2013 PF	

Scale 1:2

Parker
8 Avenue du lac. BP30749
21007-DIJON cedex-FRANCE
www.parker.com

MGV840

OUTLINE DRAWING

Format A3

F	E	S	G	I
	x			

345263E6000 E

Resolver : CB52
IP40
Paint : White RAL 9010
TOTAL INERTIA : 0.0215 kg.m²

(*) Dimensions checked for acceptance certificate

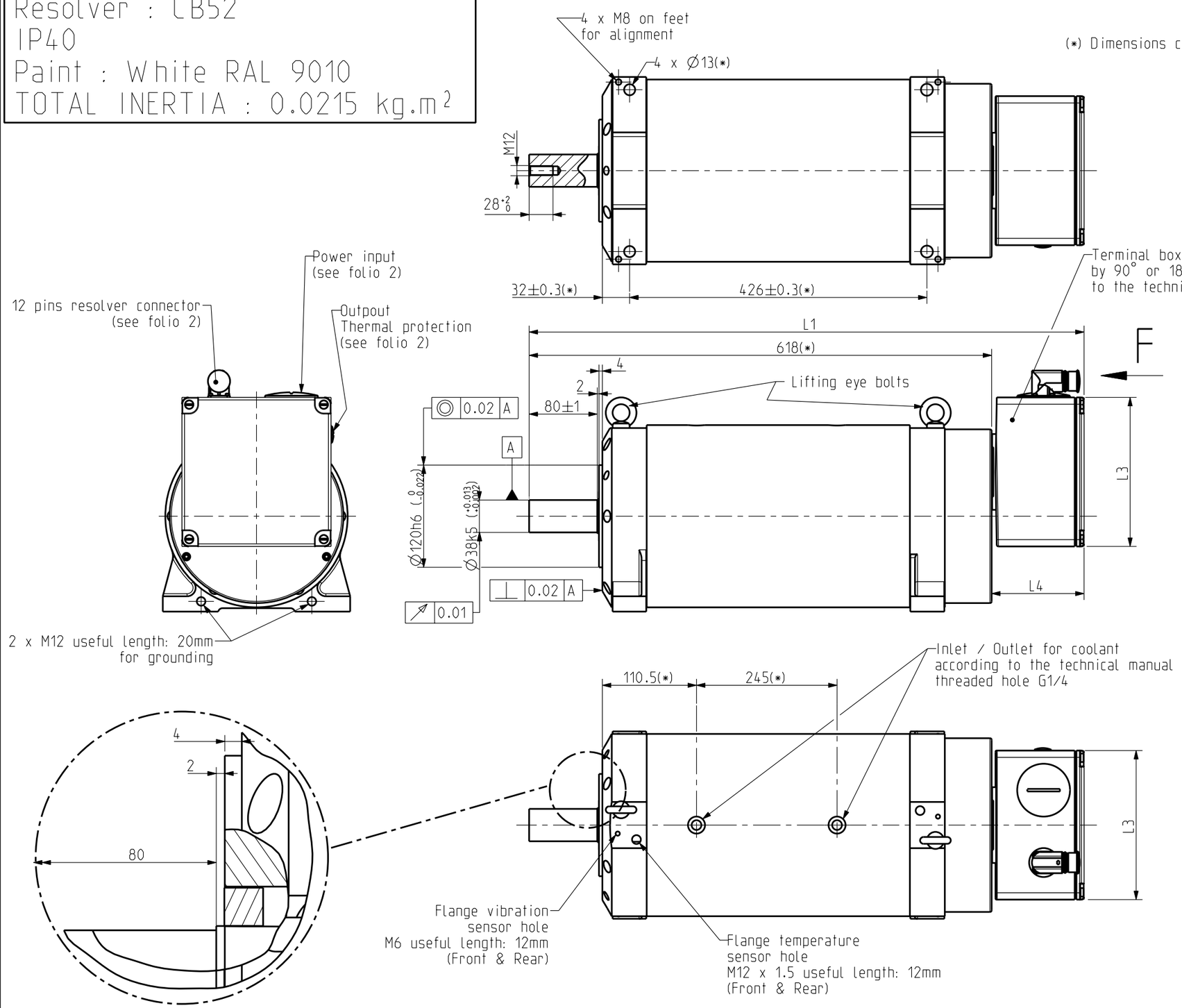

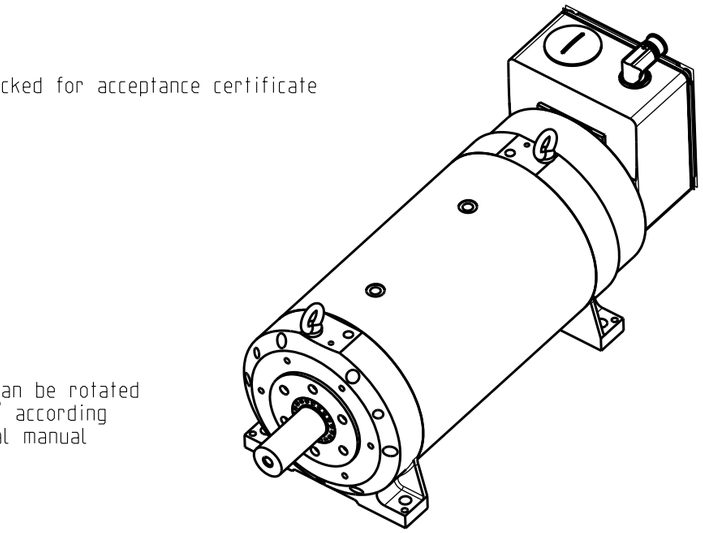

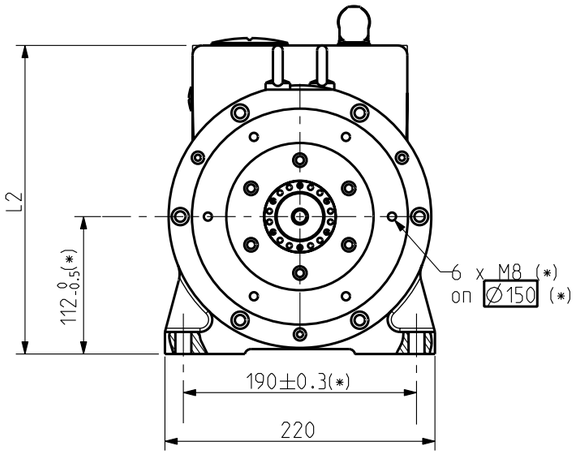

Motor	L1	L2	L3	L4	Terminal box	Weight
MGV860CBE	727	252	175	109	SEE FOLIO 2	135 kg

Drawing valid for : MGV860

Weight :

This document is the property of PARKER.Transmission as well as reproduction or copy is not permitted without written authorisation.

General tolerances
DIN ISO 2768 mK

Drawn	28/09/2015	PF	Visa
Modifications			

Scale 1:2

Parker
8 Avenue du lac. BP30749
21007-DIJON cedex-FRANCE
www.parker.com

MGV860
OUTLINE DRAWING

Format A3

F	E	S	G	I
	x			

345263E6004

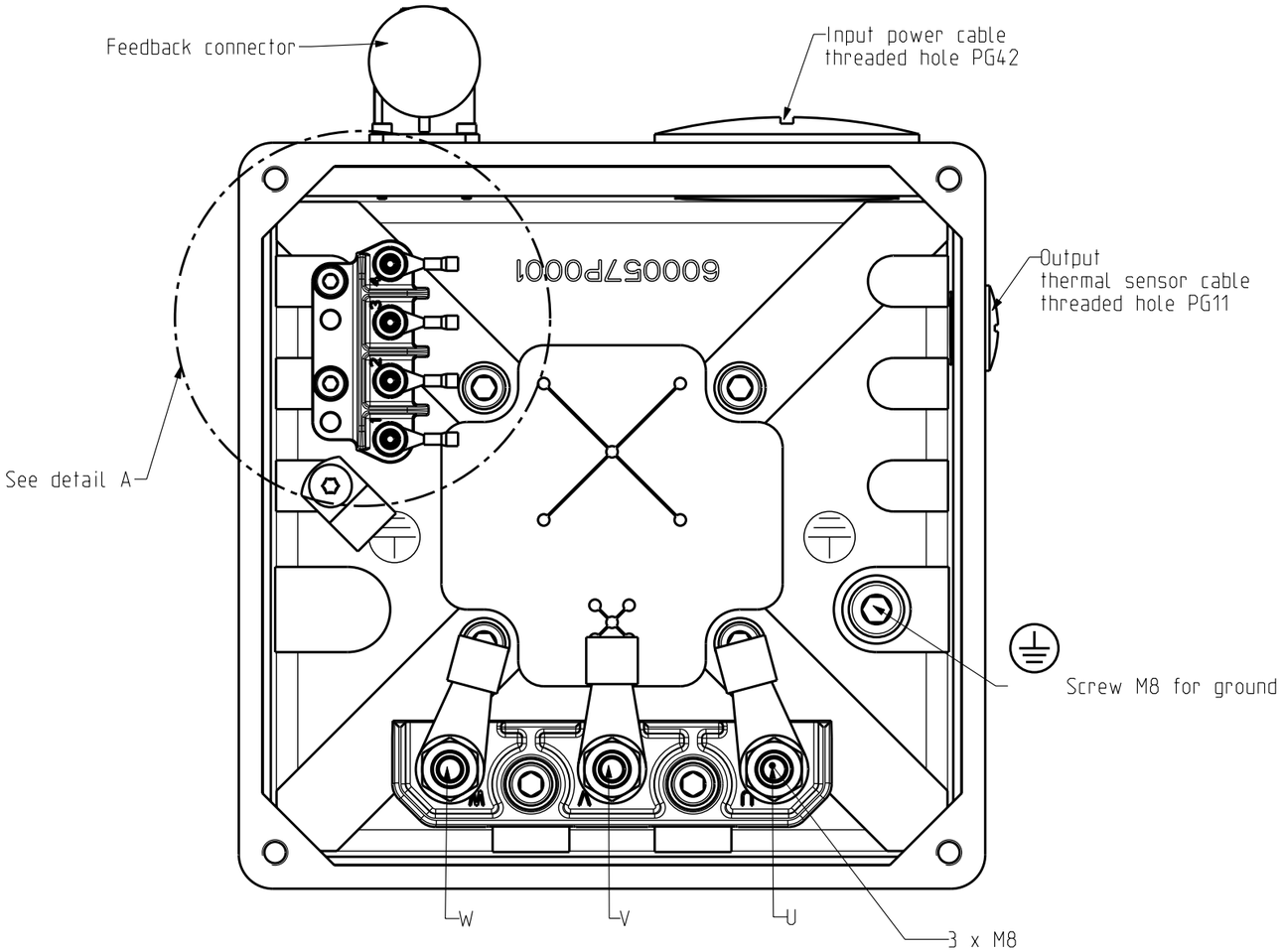

Detail A

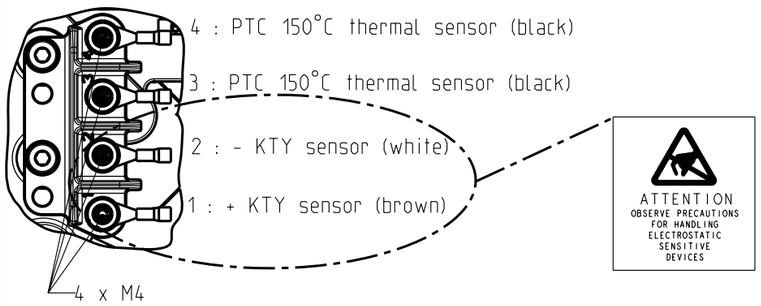

RESOLVER CONNECTOR

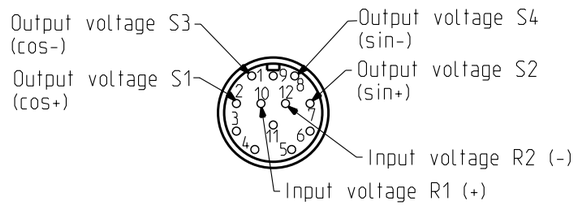

F VIEW (see folio 1)

Drawing valid for : MGV860

Weight :	General tolerances	Drawn	28/09/2015	PF	Visa					Scale	Parker	MGV860	Format	F	E	S	G	I
													A3		x			
This document is the property of PARKER.Transmission as well as reproduction or copy is not permitted without written authorisation.	DIN ISO 2768 mK	Modifications								1:2	8 Avenue du lac. BP30749 21007-DIJON cedex-FRANCE www.parker.com	OUTLINE DRAWING	345263E6004					

Resolver : CB102
IP40
Paint : Black RAL 9005

(*) Dimensions checked for acceptance certificate

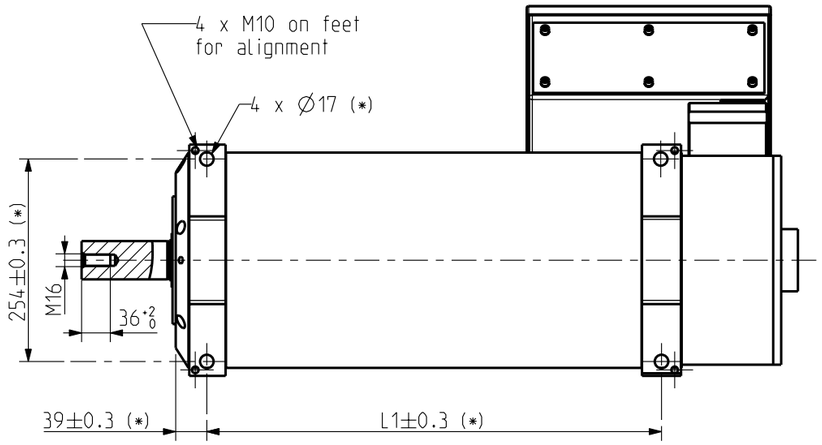

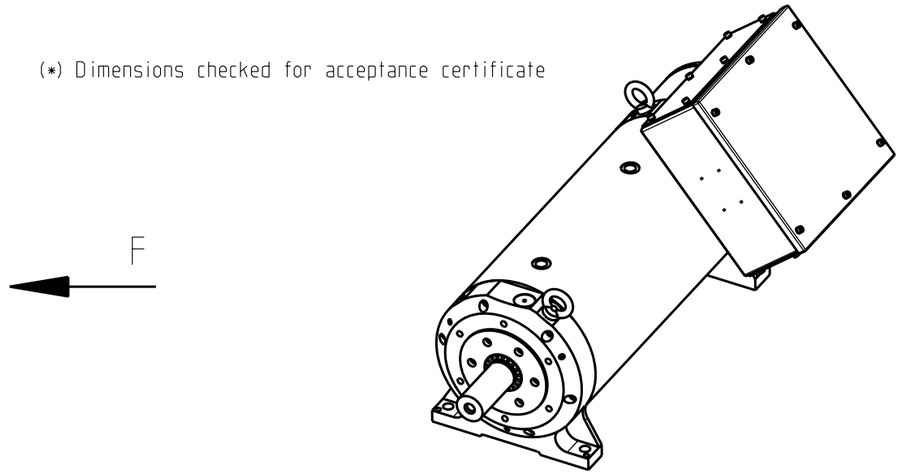

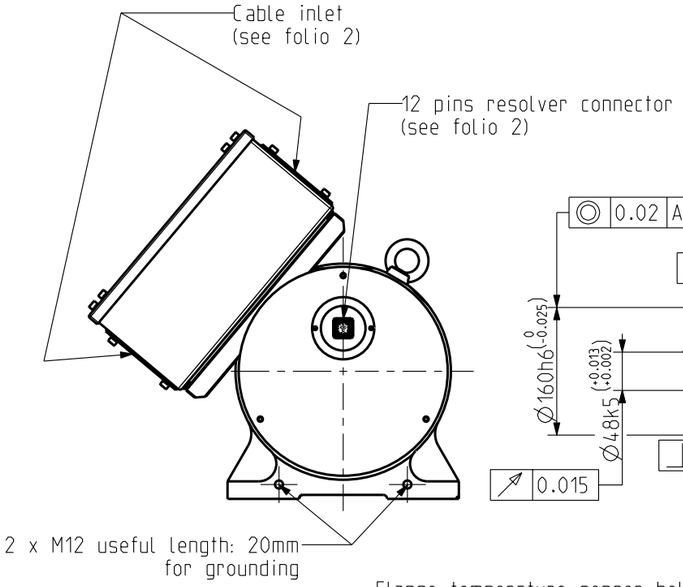

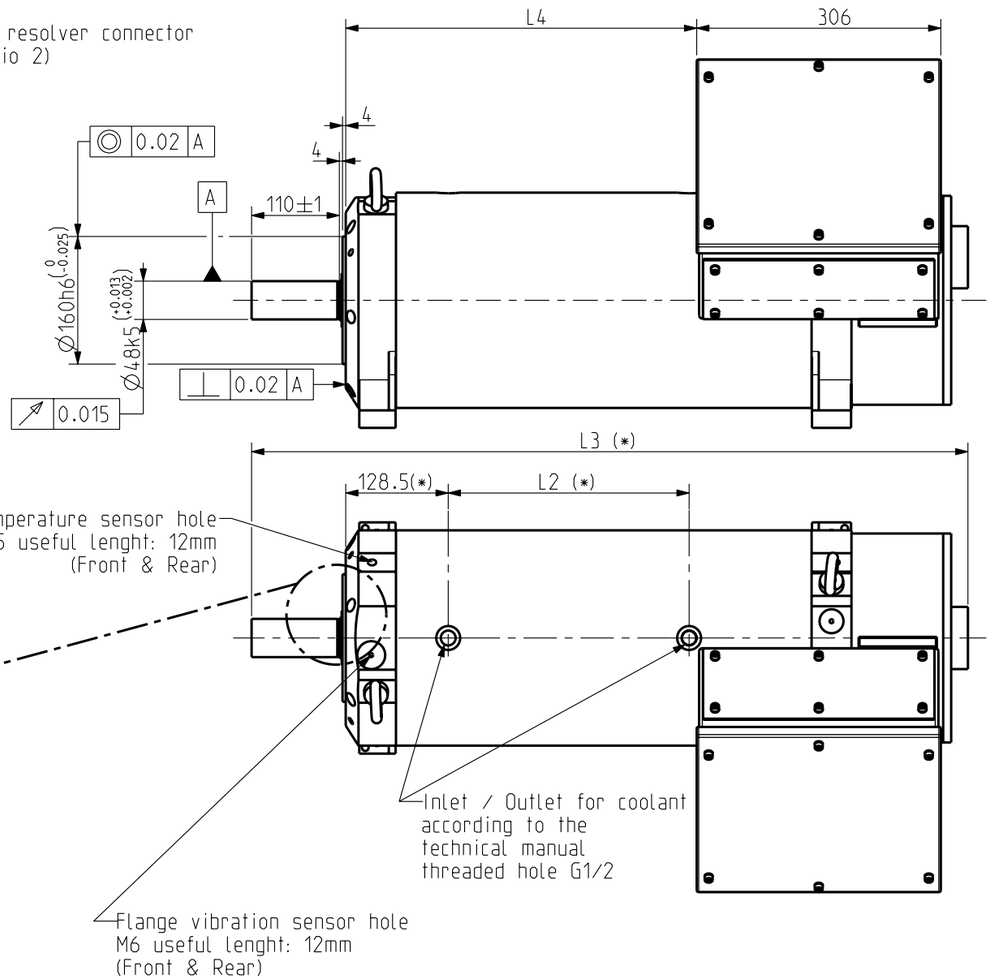

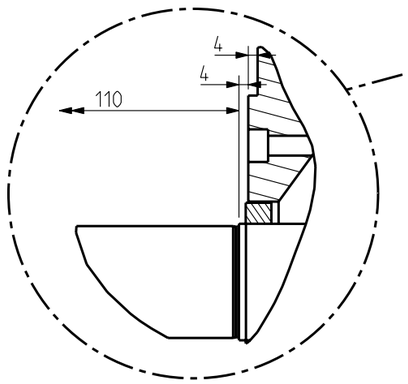

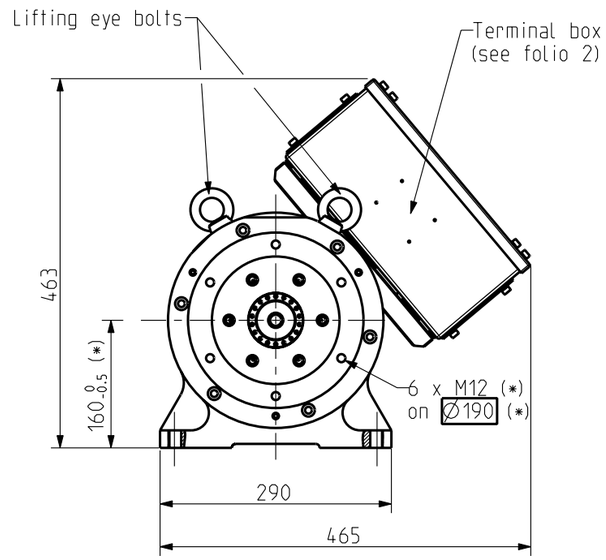

Motor	L1	L2	L3	L4	Terminal box	Weight
MGV930	397	182	725	267	see folio 2	210 kg
MGV950	570	302	898	440		270 kg
MGV970	663	422	991	533		300 kg

Drawing valid for : MGV950 / MGV970

Weight :

This document is the property of PARKER.Transmission as well as reproduction or copy is not permitted without written authorisation.

General tolerances
DIN ISO 2768 mK

Drawn	20/12/11	AH	Visa				
Modifications	C	AM23821 - 12/03/2012 PF	F	AM24091 - 09/04/2013 PF			
	B	AM23806 - 20/02/2012 PF	E	AM23885 - 19/06/2012 PF			
	G	AM24295 - 20/05/2014 PF	D	AM23841 - 12/04/2012 OD			

Scale 13:100

Parker
8 Avenue du lac. BP30749
21007-DIJON cedex-FRANCE
www.parker.com

MGV900
OUTLINE DRAWING

Format	F	E	S	G	I
A3		x			

345265E6000 G

RESOLVER CONNECTOR

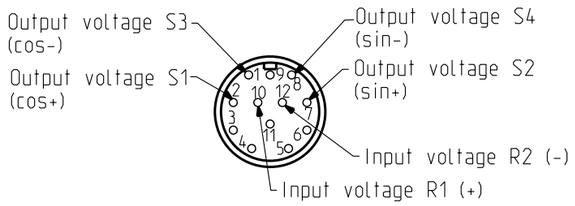

F View

Motor type	Active part	Terminal box
MGV930CAC	HKW 195_180CAC	F1
MGV930CAJ	HKW 195_180CAJ	
MGV950CAC	HKW 195_300CAC	
MGV950CBU	HKW 195_300CBU	
MGV950CAX	HKW 195_300CAX	F2
MGV970CBX	HKW 195_420CBX	

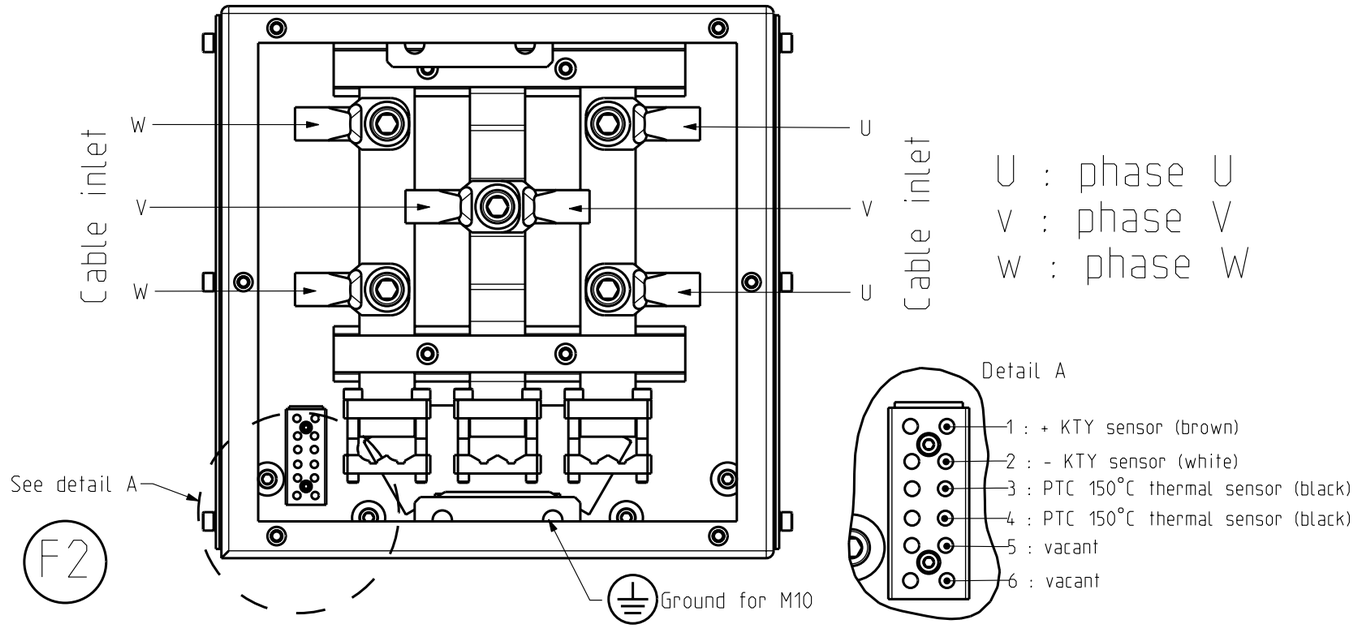

-Terminal box for current between 560 to 630 A, the maxi cable cross section is 2x120 mm²

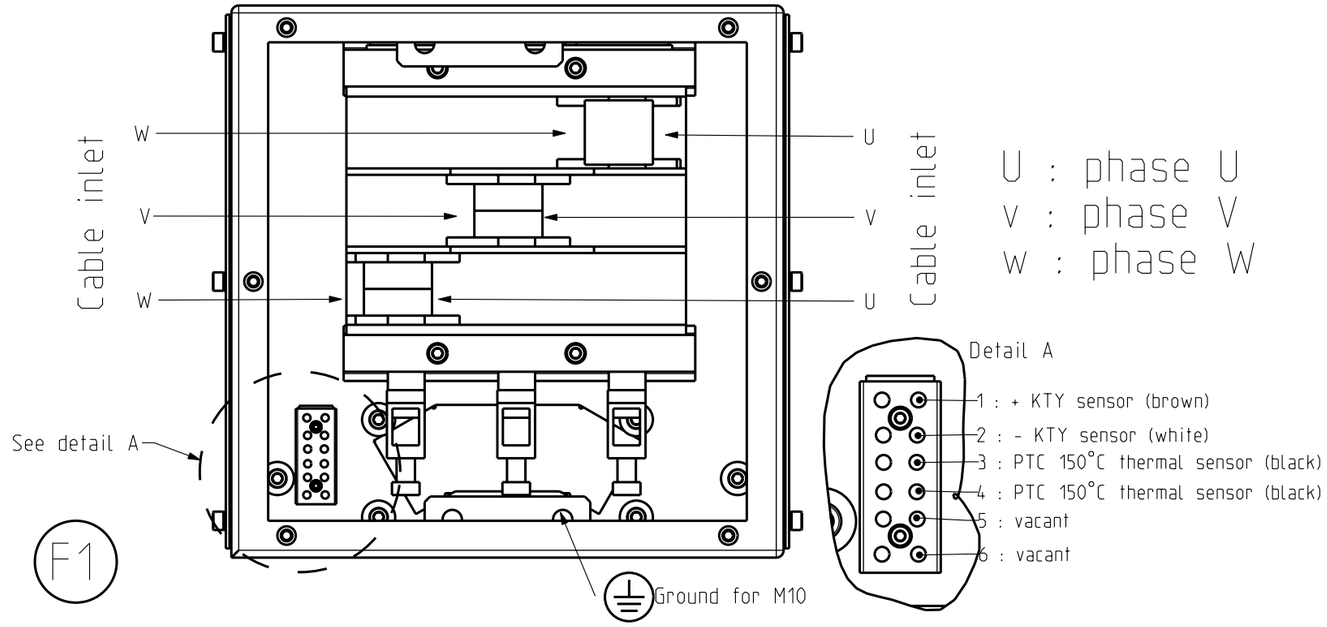

-Terminal box for current < 320 A, the cable cross section is between 95 to 185 mm²
-Terminal box to current between 320 to 560 A, tje cable cross section is betwenn 150 to 300 mm²

Drawing valid for : -

Weight :

This document is the property of PARKER.Transmission as well as reproduction or copy is not permitted without written authorisation.

General tolerances DIN ISO 2768 mK

Drawn	20/12/11	AH	Visa				
Modifications	C	AM23821 - 12/03/2012 PF	F	AM24091 - 09/04/2013 PF			
	B	AM23806 - 20/02/2012 PF	E	AM23885 - 19/06/2012 PF			
	G	AM24295 - 20/05/2014 PF	D	AM23841 - 12/04/2012 OD			

Scale 13:100

Parker
8 Avenue du lac. BP30749
21007-DIJON cedex-FRANCE
www.parker.com

MGV900

OUTLINE DRAWING

Format	F	E	S	G	I
A3		x			

345265E6000 G

XLife bearings. Max speed 18000rpm
Maximum radial load permitted : 500N

Sensor : ERM220 - 600 lines
Active part : HKW195_180CACR1000

IP40
Paint : Grey RAL 7035

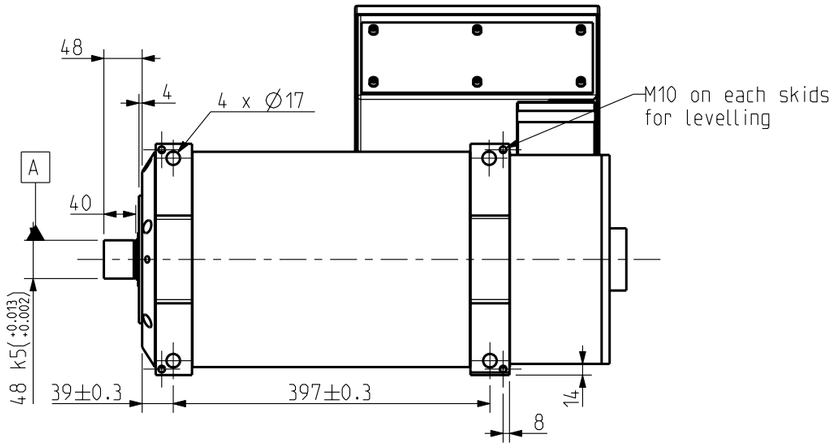

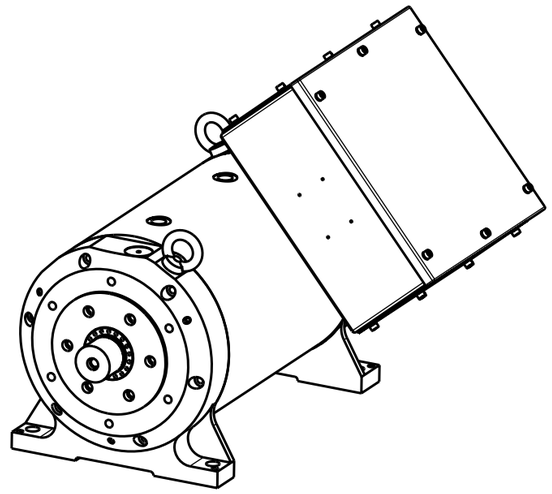

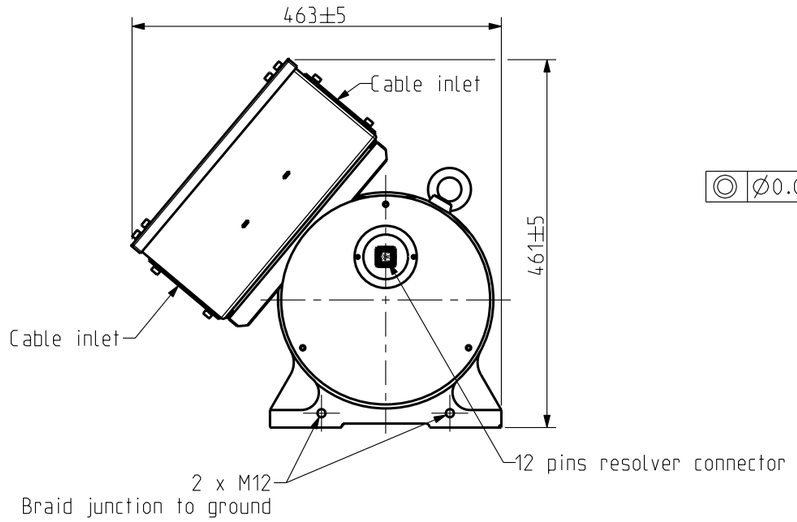

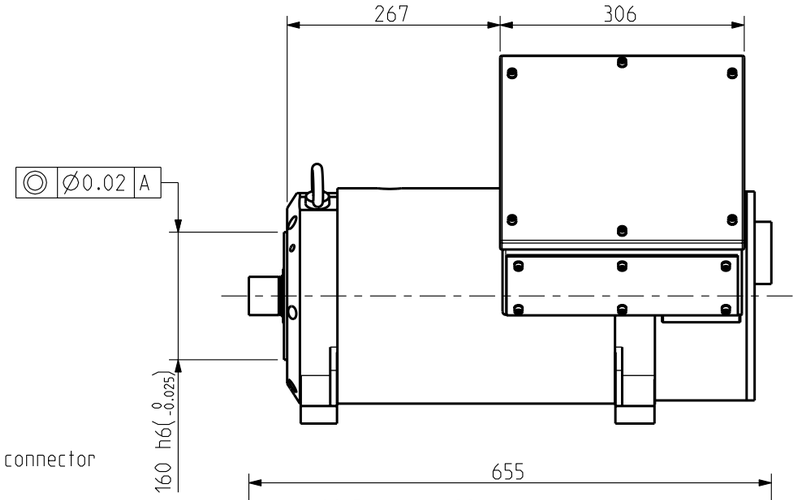

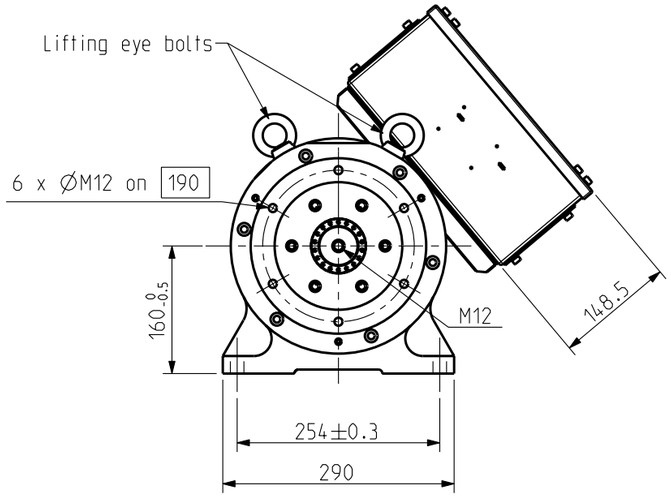

FEEDBACK CONNECTOR

F view

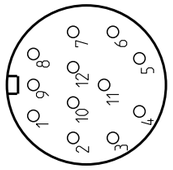

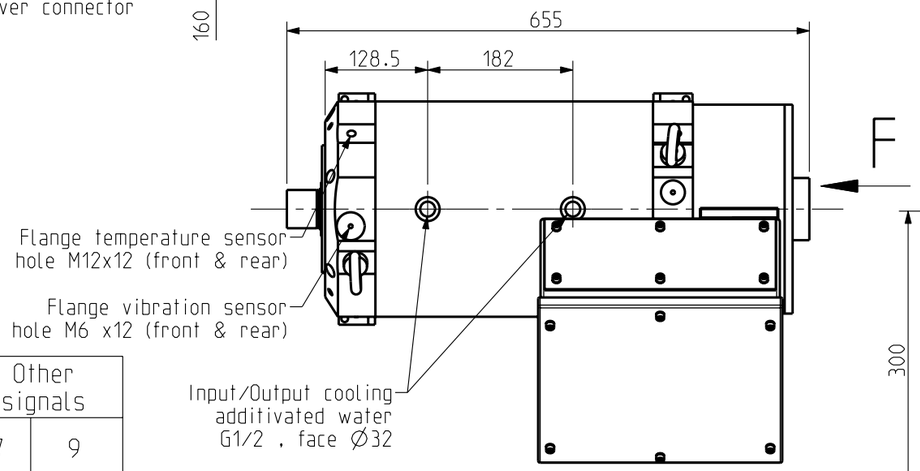

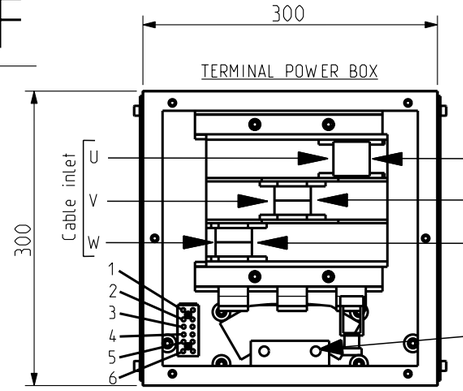

Connector : 95-185 mm²

U : phase U
V : phase V
W : Phase W
1 : + KTY sensor (brown)
2 : - KTY sensor (white)
3 : PTC 150°C thermical sensor (black)
4 : PTC 150°C thermical sensor (black)
5 : Vacant
6 : Vacant

Ground for M10

Incremental signals TTL

Power supply				Incremental signals						Other signals	
12	2	10	11	5	6	8	1	3	4	7	9
Up	Sensor Up	0V	Sensor 0V	A1	A1\	A2	A2\	A0	A0\	AS\	Vacant

Plan valable pour : - MGV930CACKB3XR6001

Masse : 210 kg

General tolerances
DIN ISO 2768 mK

Dessine	19/12/11	AH	Vise		
Modifications					
B	AM 23774 17/01/12 AH				
A	AM 23769 11/01/12 AH				

Echelle 13:100

Parker
8 Avenue du lac. BP30749
21007-DIJON cedex-FRANCE
www.parker.com

MGV930
ENCOMBREMENT

Format A3

F	E	S	G	I	
	x				

345265E6001 B

Ce document, propriete exclusive de PARVEX, ne peut etre communique, copie ou reproduit totalement ou partiellement sans son autorisation ecrite.

Resolver : CB102
IP40
Paint : Black RAL 9005

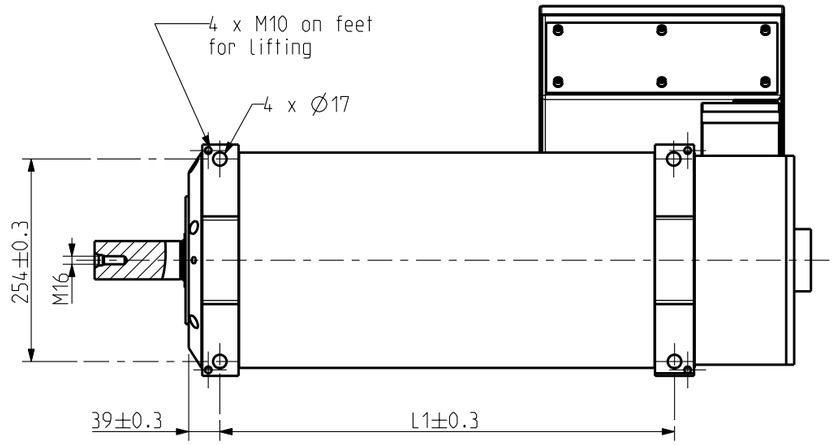

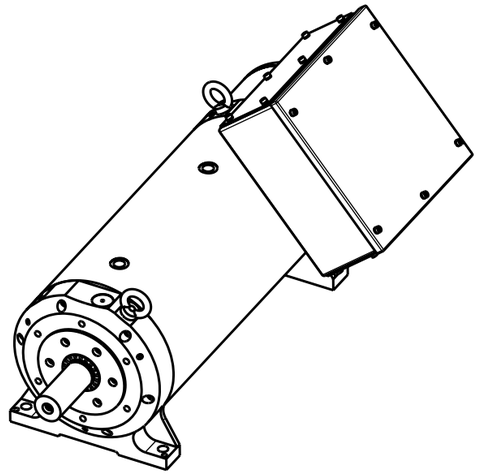

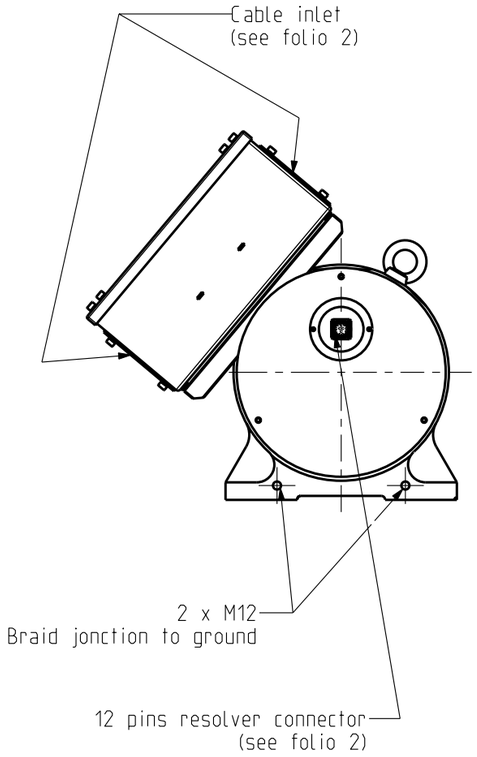

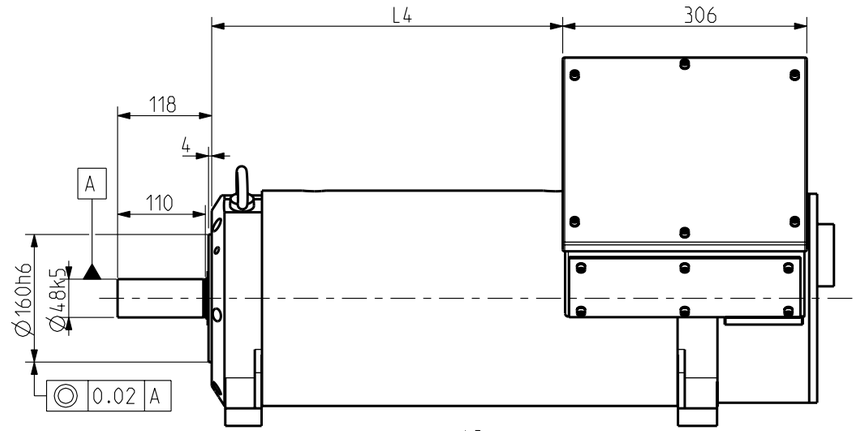

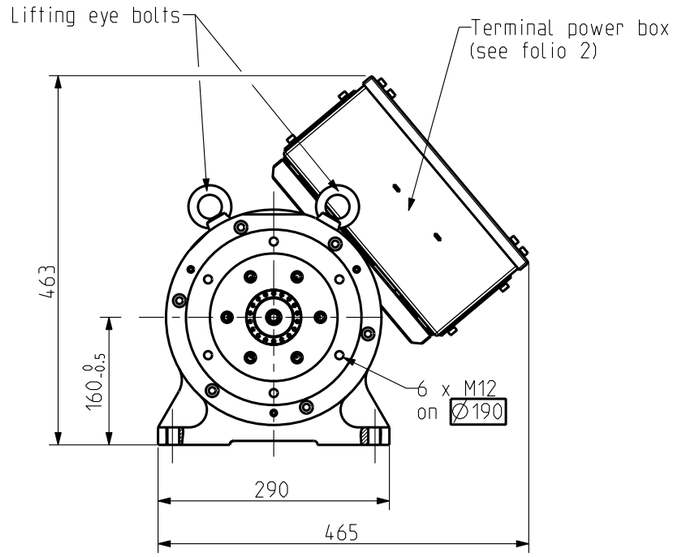

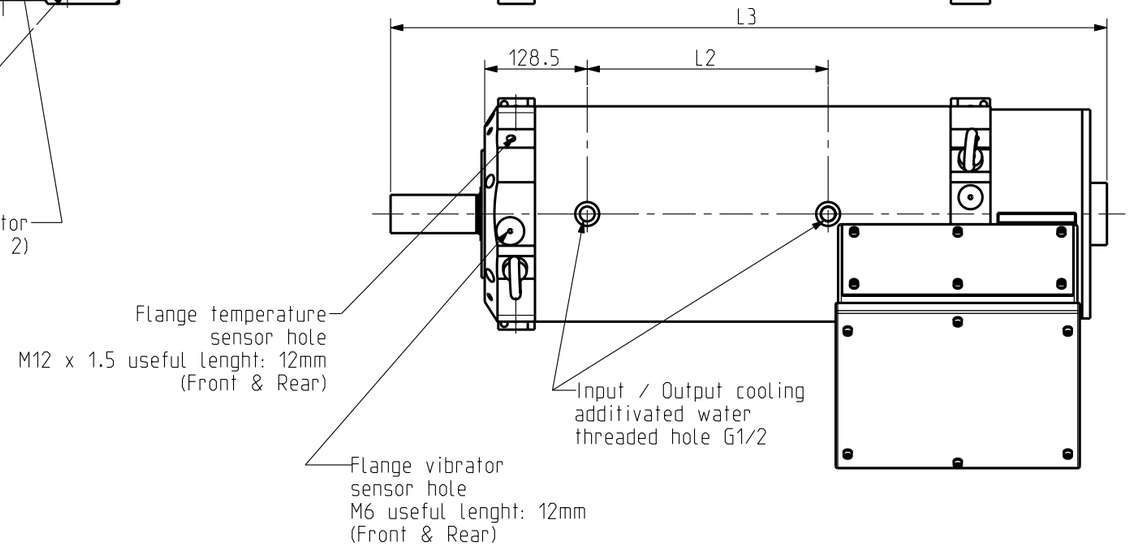

Motor	L1	L2	L3	L4	Terminal power box	Weight
MGV930	397	182	725	267	see folio 2	210 kg

Plan valable pour : -

Masse :

General tolerances
DIN ISO 2768 mK

Dessine	15/02/2012	PF	Vise	
Modifications				

Echelle 13:100

Parker
8 Avenue du lac. BP30749
21007-DIJON cedex-FRANCE
www.parker.com

MGV900
ENCOMBREMENT

Format A3

F	E	S	G	I
	x			

345265E6002 -

Ce document, propriete exclusive de PARVEX, ne peut etre communique, copie ou reproduit totalement ou partiellement sans son autorisation ecrite.

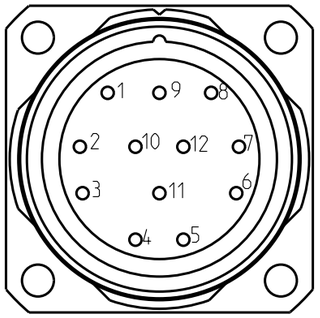

PIN	SIGNAL
1	Outpout voltage S3 (cos-)
2	Outpout voltage S1 (cos+)
3	
4	
5	
6	
7	Outpout voltage S2 (sin+)
8	Outpout voltage S4 (sin-)
9	
10	Input voltage R1
11	
12	Input voltage R2

FEEDBACK CONNECTOR

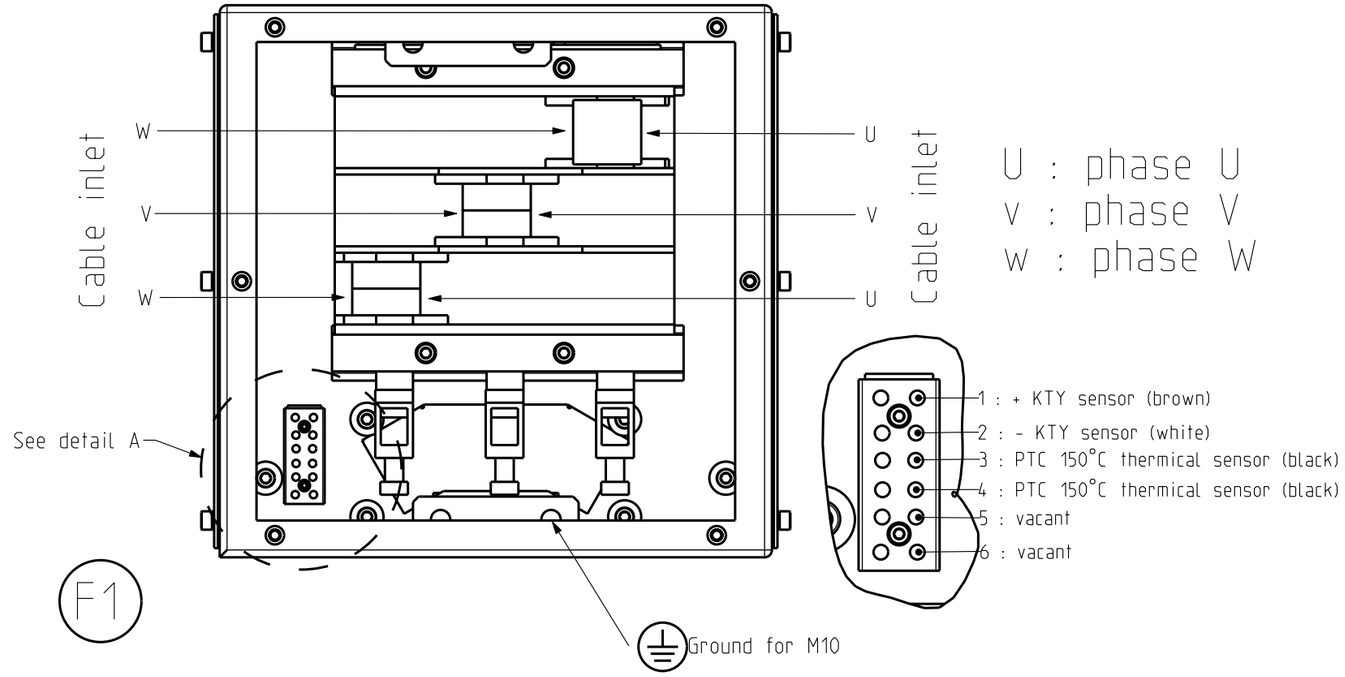

-Terminal box for current < 320 A, the maxi cable cross section is between 95 to 300 mm²
-Terminal box for current between 320 to 560 A, the maxi cable cross section is between 150 to 300 mm²

Motor type	Active part	Terminal power box
MGV930CAC	HKW195_180CACR1000	F1

Plan valable pour : -

Masse :

Ce document, propriete exclusive de PARVEX, ne peut etre communique, copie ou reproduit totalement ou partiellement sans son autorisation ecrite.

General tolerances
DIN ISO 2768 mK

Dessine	15/02/2012	PF	Vise				
Modifications							

Echelle 13:100

Parker
8 Avenue du lac. BP30749
21007-DIJON cedex-FRANCE
www.parker.com

MGV900

ENCOMBREMENT

Format	F	E	S	G	I
A3		x			

345265E6002 -

Resolver : CB102
IP40
Paint :White RAL 9010
Total rotor inertia :<=0.072 kgm²
Ball bearings : XCS
Estimated lifetime : 4000h
at max speed 5000 rpm &
acyclism 250Hz, amplitude ±0.12°.
No axial nor radial strength.

(*) Dimensions checked for acceptance certificate

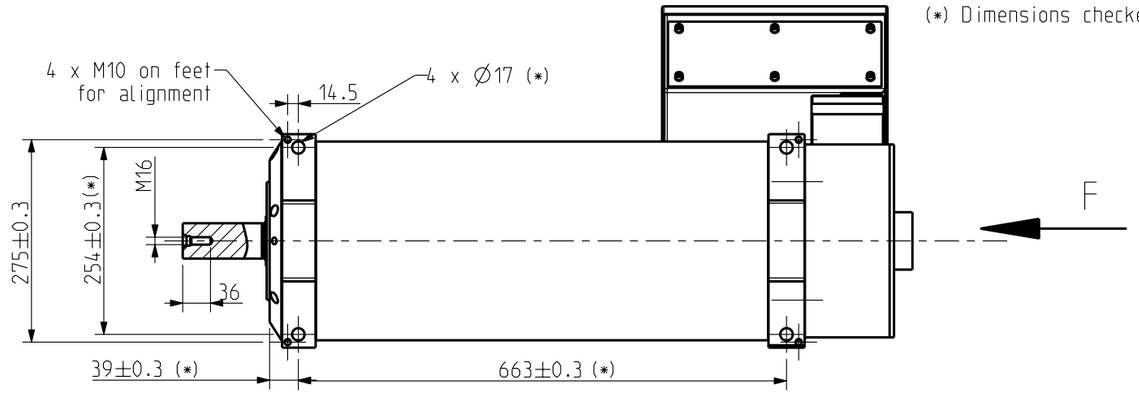

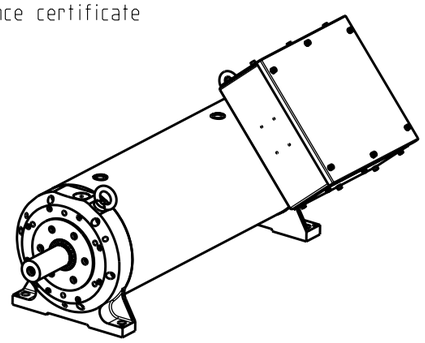

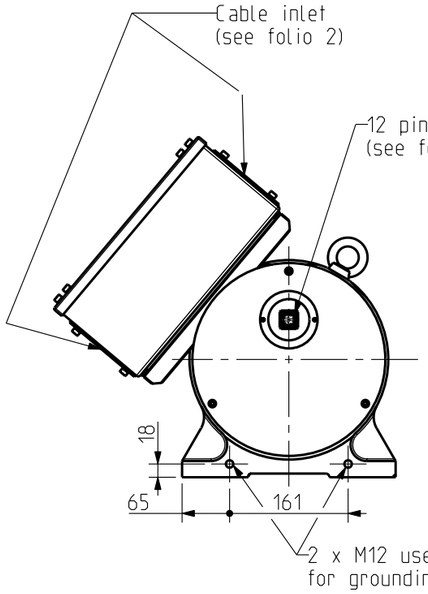

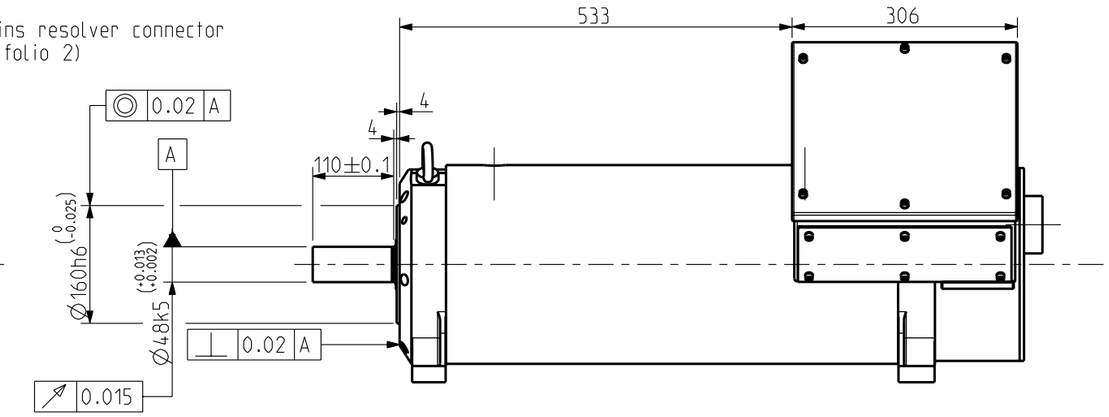

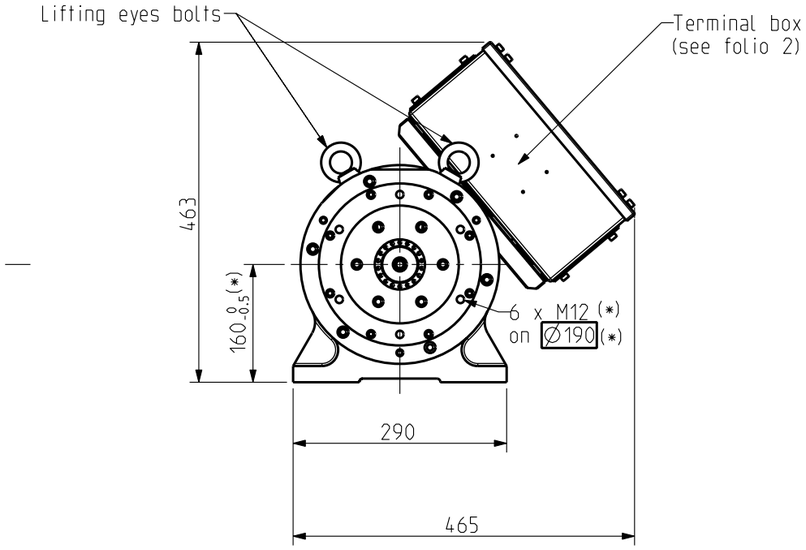

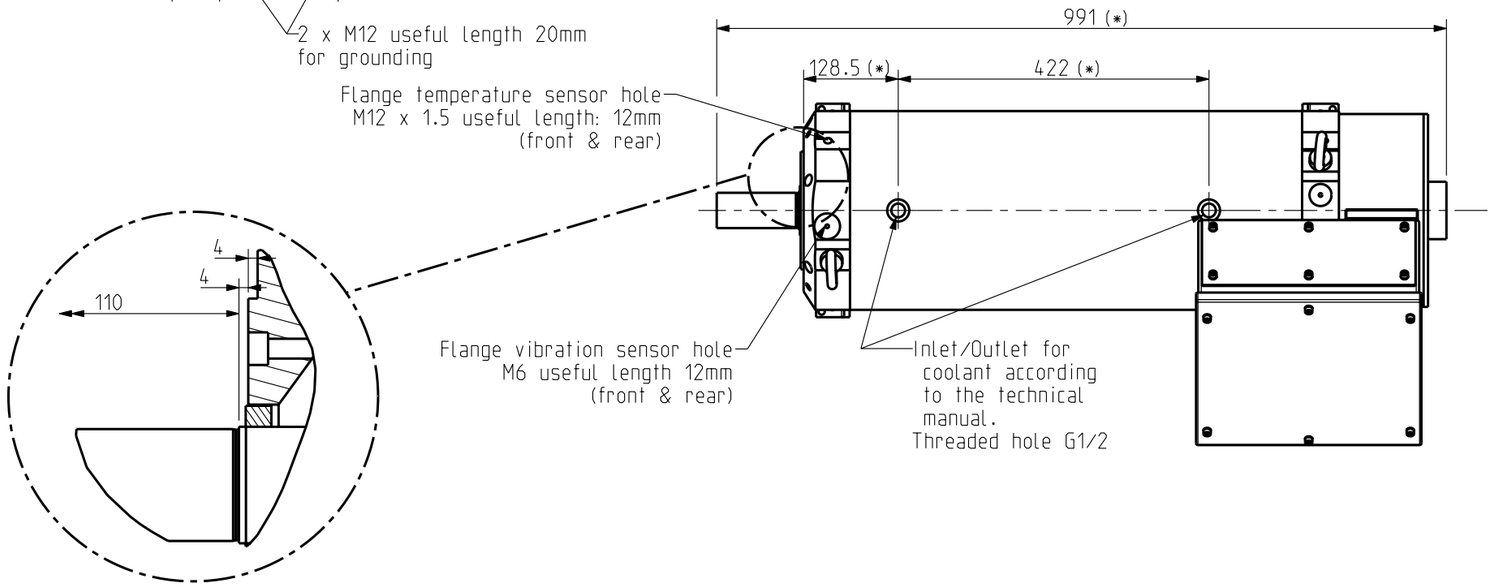

Motor	Terminal box	Weight
MGV966	see folio 2	300 kg

Drawing valid for : MGV966DHRAB3XR6004 and MGV966DAXAB3XR6004

Weight :

This document is the property of PARKER.Transmission as well as reproduction or copy is not permitted without written authorisation.

General tolerances
DIN ISO 2768 mK

Drawn	11/01/16	AH	Visa	
Modifications				
A	AM24492 13/01/16 AH			

Scale 13:100

Parker
8 Avenue du lac. BP30749
21007-DIJON cedex-FRANCE
www.parker.com

MGV966
OUTLINE DRAWING

Format A3

F	E	S	G	I
	x			

345265E6004 A

RESOLVER CONNECTOR

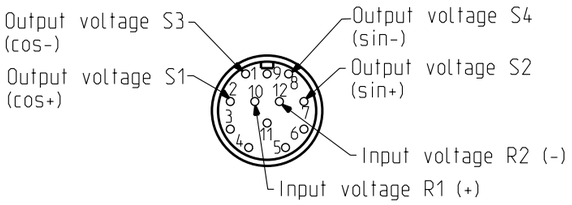

F View

Motor type	Active part	Terminal box	Current A rms
MGV966DHR	HKW 195_400DHR	F1	384
MGV966DAX	HKW 195_400DAX	F1	505

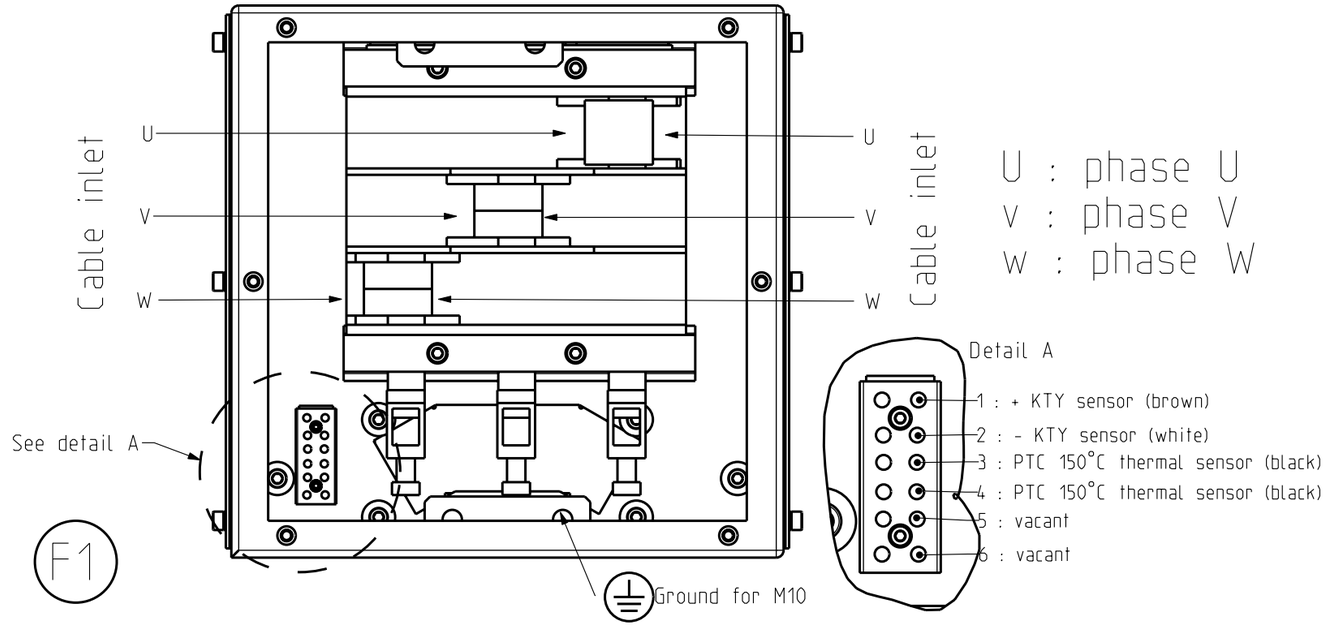

-Terminal box for current < 320 A, the cable cross section is between 95 to 185 mm²
-Terminal box to current between 320 to 560 A, the cable cross section is betwenn 150 to 300 mm²

Drawing valid for : MGV966DHRAB3XR6004 and MGV966DAXAB3XR6004

Weight :	General tolerances	Drawn	11/01/16	AH	Visa					Scale	Parker	MGV966	Format	F	E	S	G	I	
													A3		x				
This document is the property of PARKER.Transmission as well as reproduction or copy is not permitted without written authorisation.	DIN ISO 2768 mK	Modifications								13:100	8 Avenue du lac. BP30749 21007-DIJON cedex-FRANCE www.parker.com	OUTLINE DRAWING	345265E6004						A
			A	AM24492 13/01/16 AH															

Resolver : CB102
IP40
Paint : Black RAL 9005

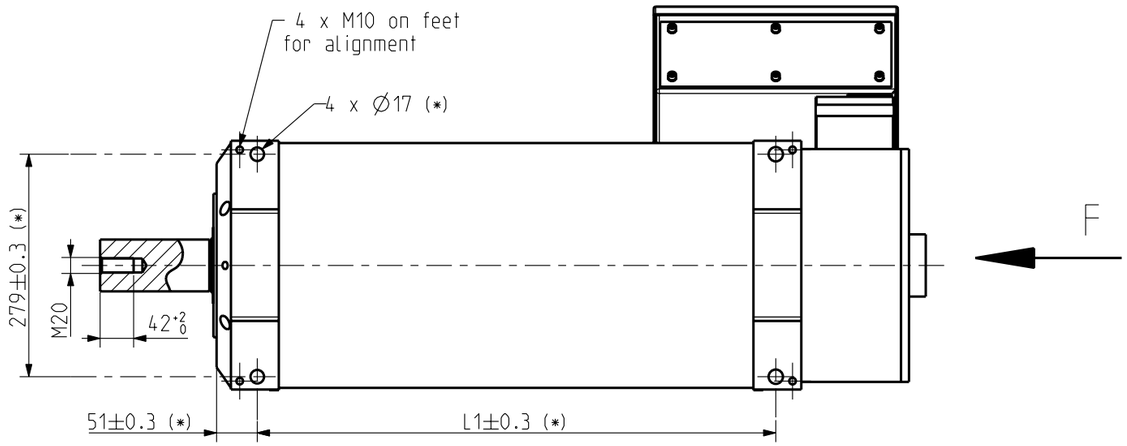

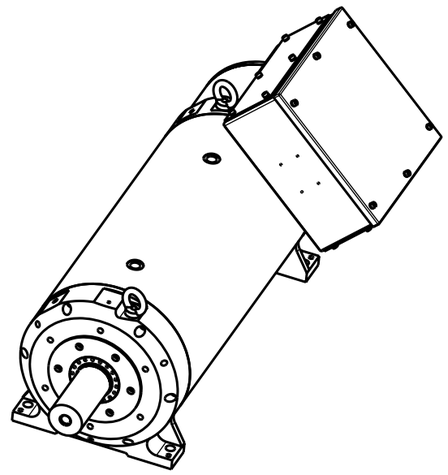

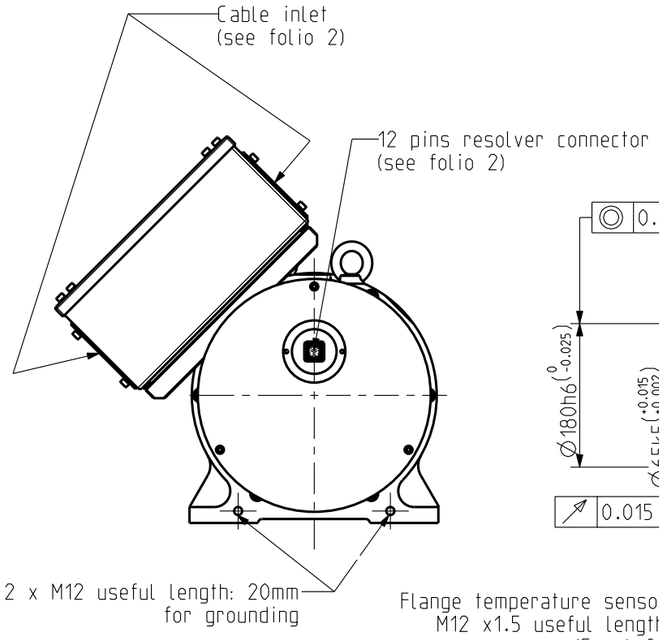

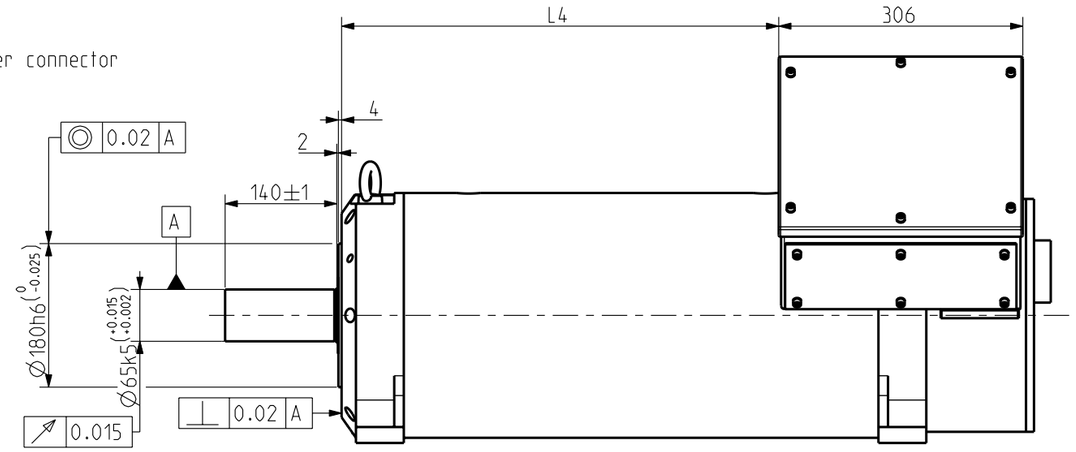

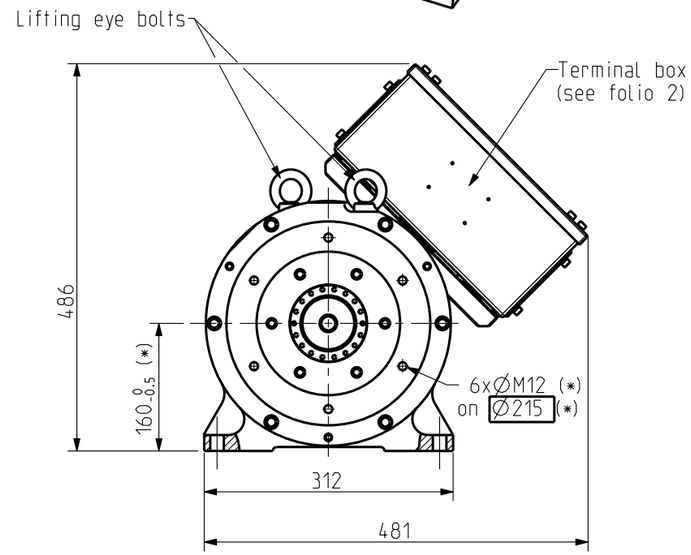

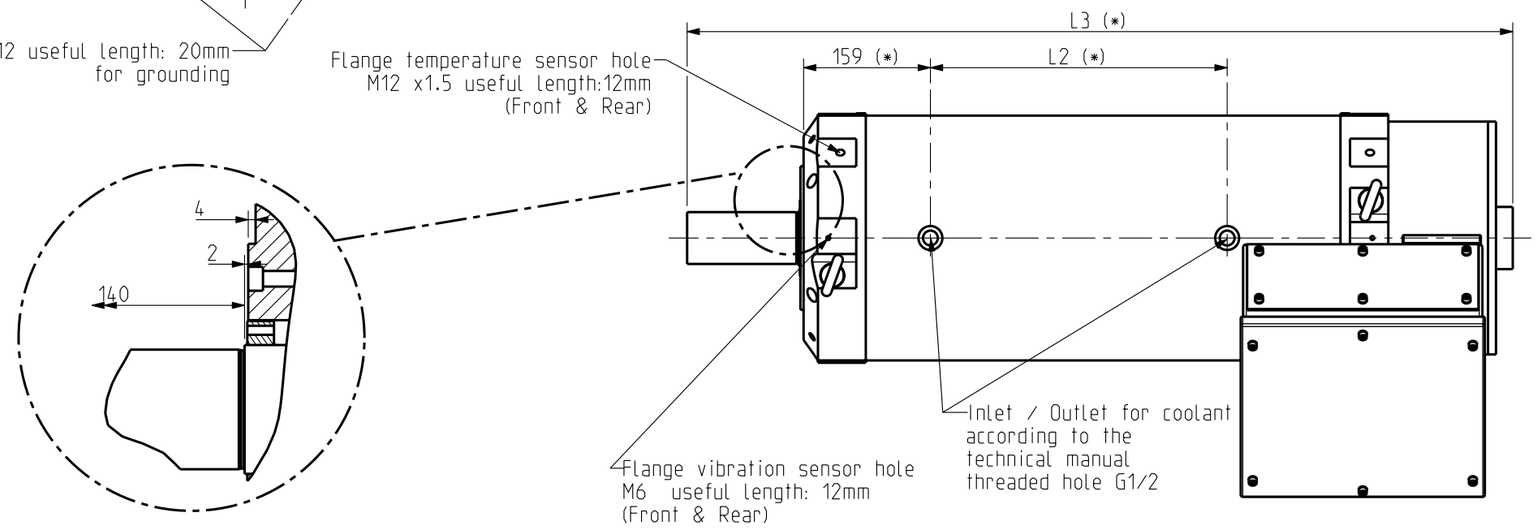

Motor	L1	L2	L3	L4	Terminal box	Weight
MGVA50	650	372	1035	552	see folio 2	395 kg

(*) Dimensions checked for acceptance certificate

Drawing valid for : MGVA50

Weight :

This document is the property of PARKER.Transmission as well as reproduction or copy is not permitted without written authorisation.

General tolerances
DIN ISO 2768 mK

Drawn	09/01/2012	PF	Visa		
Modifications	C	AM23841 - 12/04/12 OD			
	B	AM23821 - 12/03/2012 PF			
	A	AM23806 - 20/02/2012 PF	D	AM24091 - 09/04/2013 PF	

Scale 1:5

Parker
8 Avenue du lac. BP30749
21007-DIJON cedex-FRANCE
www.parker.com

MGVA

OUTLINE DRAWING

Format	F	E	S	G	I	
A3		x				

345267E6000 D

RESOLVER CONNECTOR

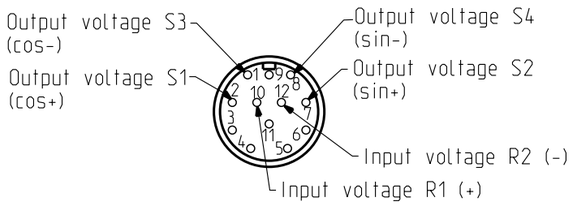

F VIEW

Motor type	Active part	Terminal box
MGVA50DAC	HKW 242_375DAC	F1
MGVA50DAB	HKW 242_375DAB	
MGVA50DAA	HKW 242_375DAA	F2
MGVA50DBB	HKW 242_375DBB	

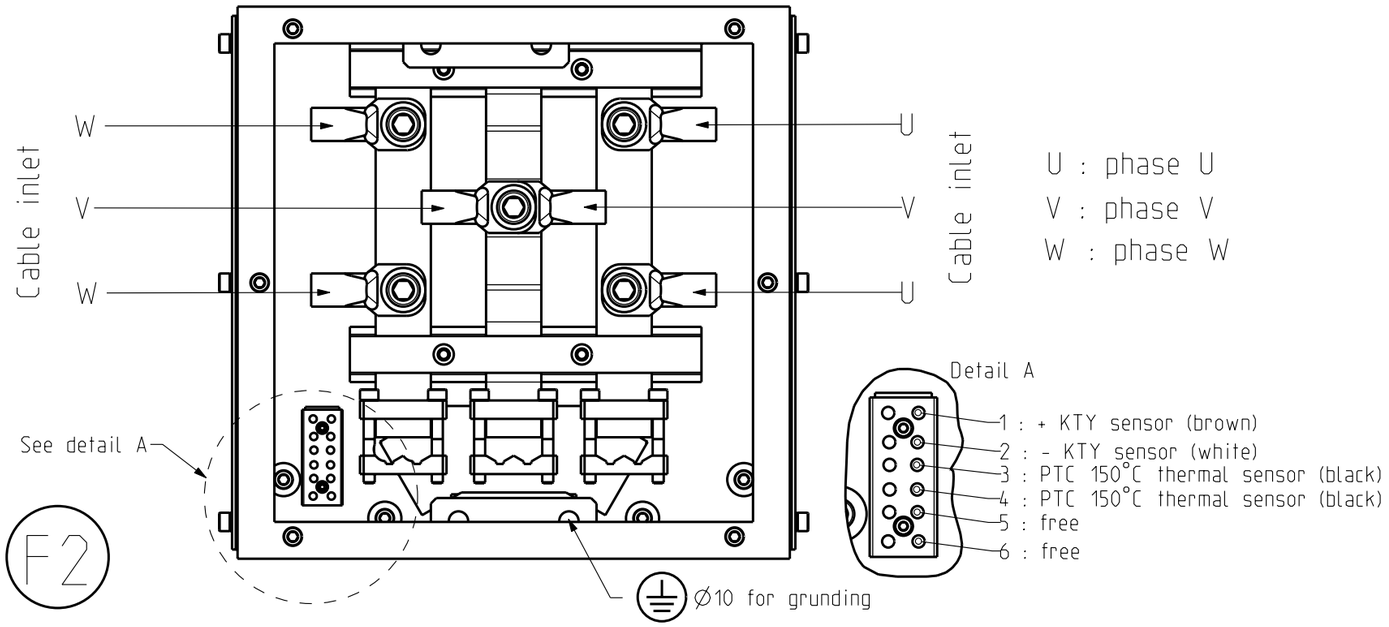

F2

-Terminal box for current between 560 to 630 A, the maxi cable cross section is 2x120 mm²

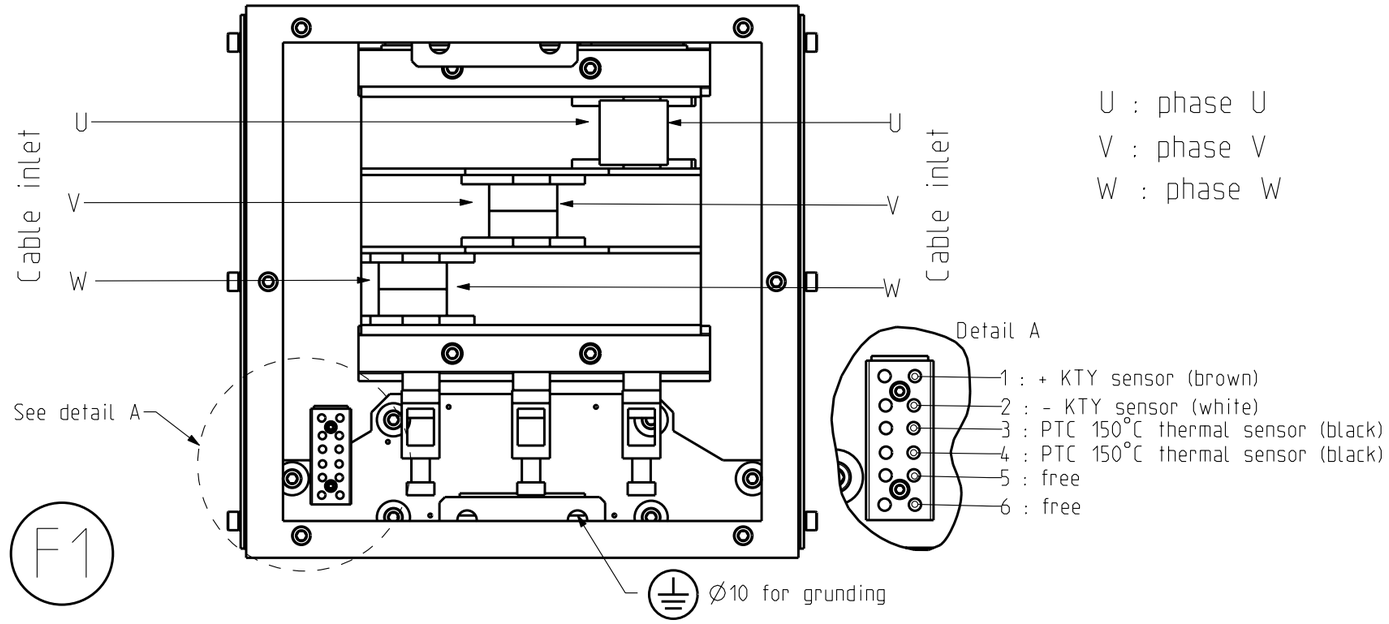

F1

-Terminal box for current < 320 A, the maxi cable cross section is between 95 to 185 mm²
-Terminal box for current between 320 to 560 A, the maxi cable cross section is between 150 to 300 mm²

Drawing valid for : -

Weight :

This document is the property of PARKER.Transmission as well as reproduction or copy is not permitted without written authorisation.

General tolerances DIN ISO 2768 mK

Drawn	09/01/2012	PF	Visa	
Modifications C	AM23841 - 12/04/12 OD			
B	AM23821 - 12/03/2012 PF			
A	AM23806 - 20/02/2012 PF	D	AM24091 - 09/04/2013 PF	

Scale 1:5

Parker
8 Avenue du lac. BP30749
21007-DIJON cedex-FRANCE
www.parker.com

MGVA

OUTLINE DRAWING

Format	F	E	S	G	I
A3		x			

345267E6000 D

Resolver : CB102
IP40
Paint :White RAL 9010

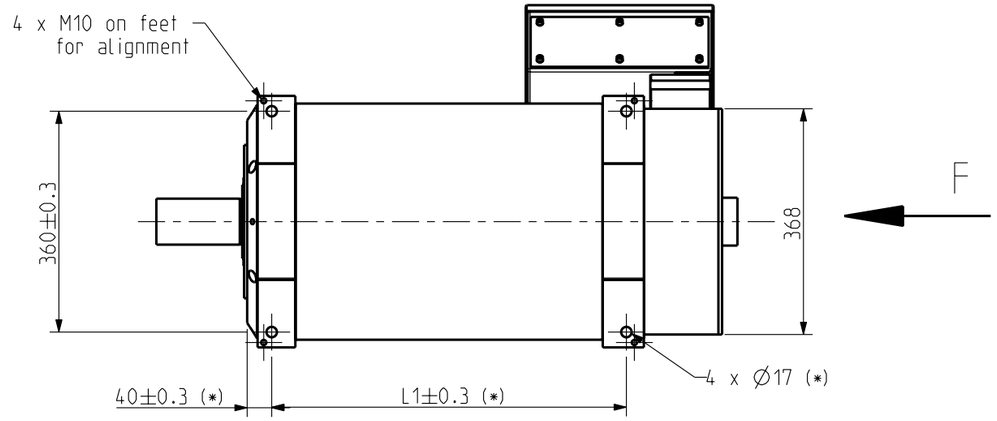

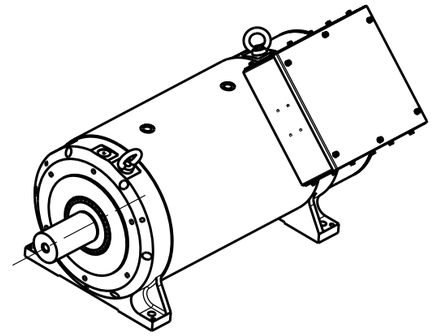

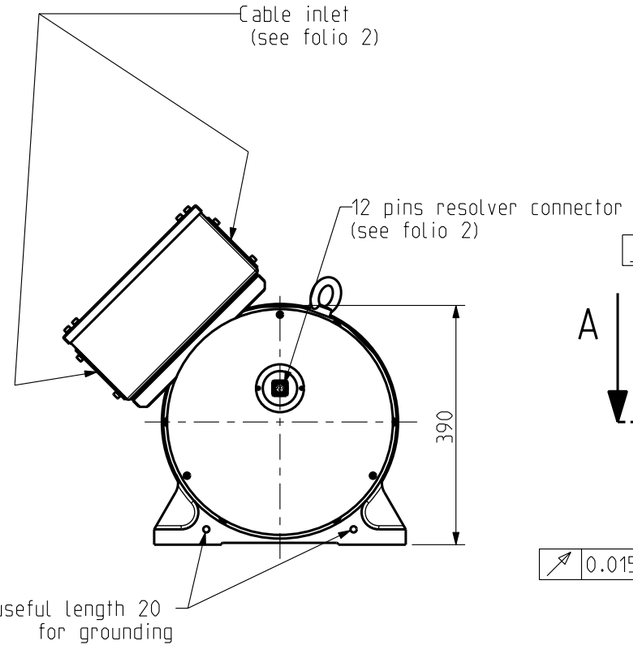

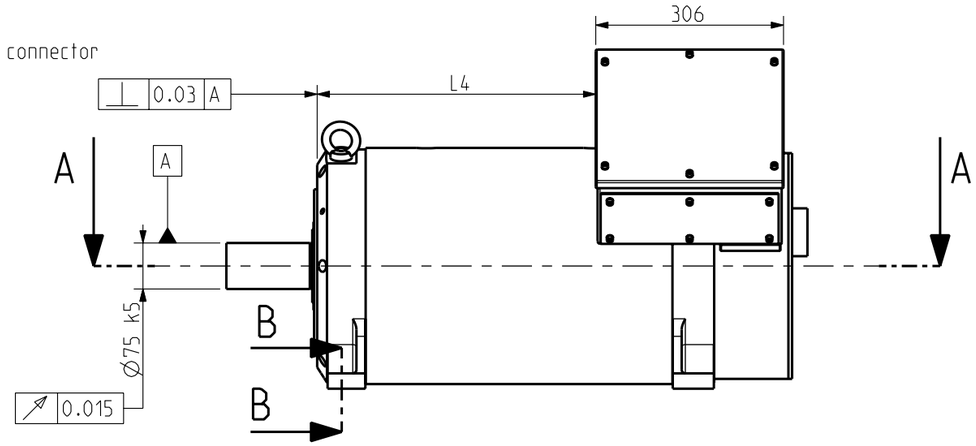

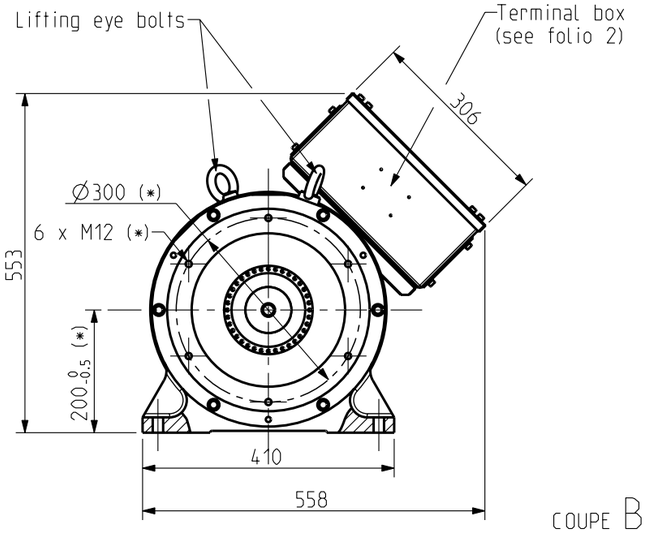

COUPE B-B
ECHELLE 1:10

COUPE A-A

DETAIL A
ECHELLE 3:10

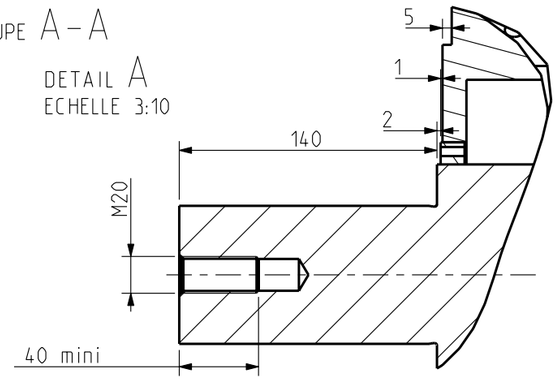

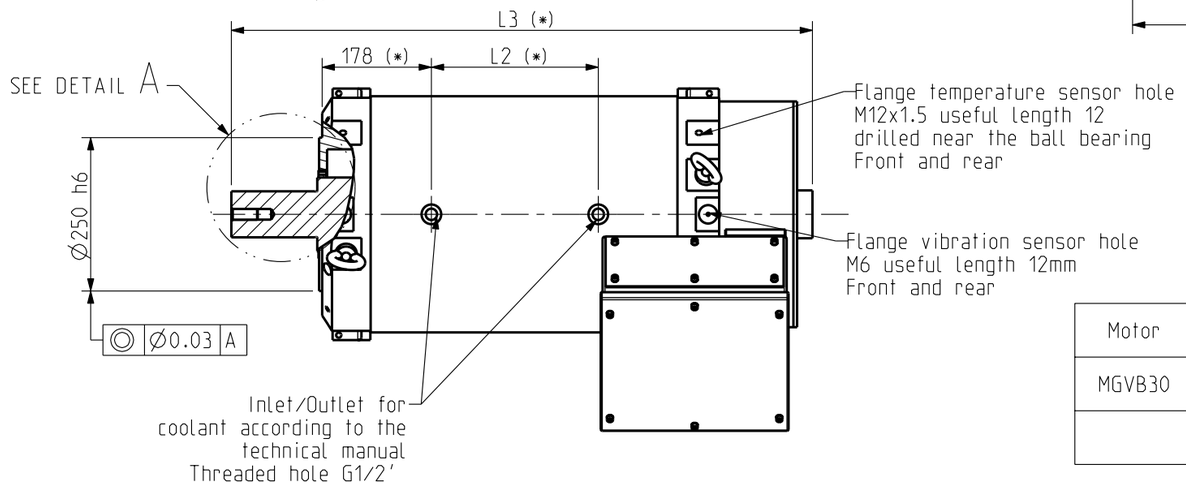

Motor	L1	L2	L3	L4	Terminal box	Weight
MGVB30	578	272	947	454	see folio 2	570 kg

(*) Dimensions checked for acceptance certificate

Drawing valid for : MGVB30

Weight :

This document is the property of PARKER.Transmission as well as reproduction or copy is not permitted without written authorisation.

General tolerances
DIN ISO 2768 mK

Drawn	05/10/15	AH	Visa				
Modifications							

Scale 1:5

Parker
8 Avenue du lac. BP30749
21007-DIJON cedex-FRANCE
www.parker.com

MGVB

OUTLINE DRAWING

Format A3

F	E	S	G	I
	x			

345344E6001

RESOLVER CONNECTOR

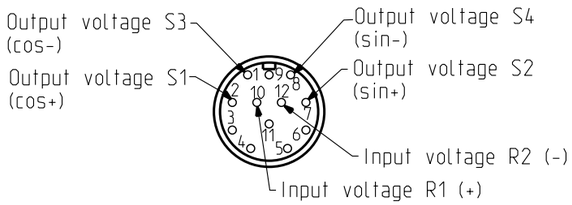

F VIEW

Motor type	Active part	Io (Arms)	Terminal box
MGVB30HAC	HKW 310-300HAC	290	F1
			F2

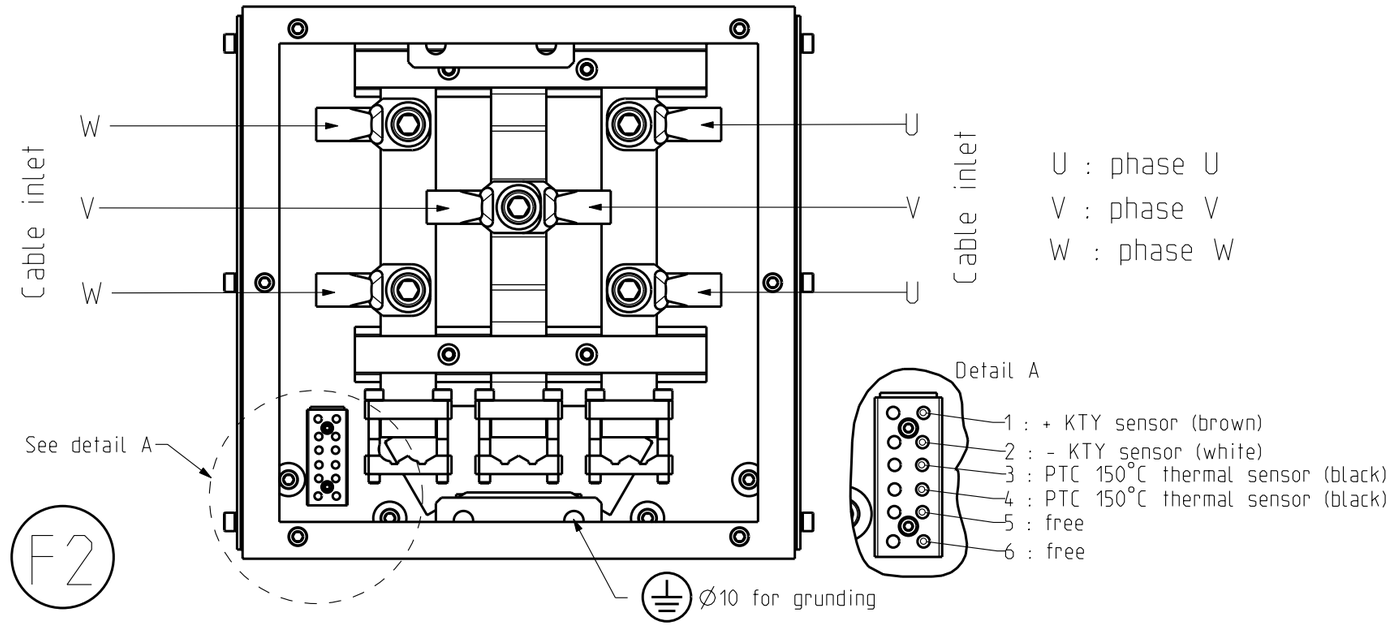

-Terminal box for current between 560 to 630 A, the maxi cable cross section is 2x120 mm²

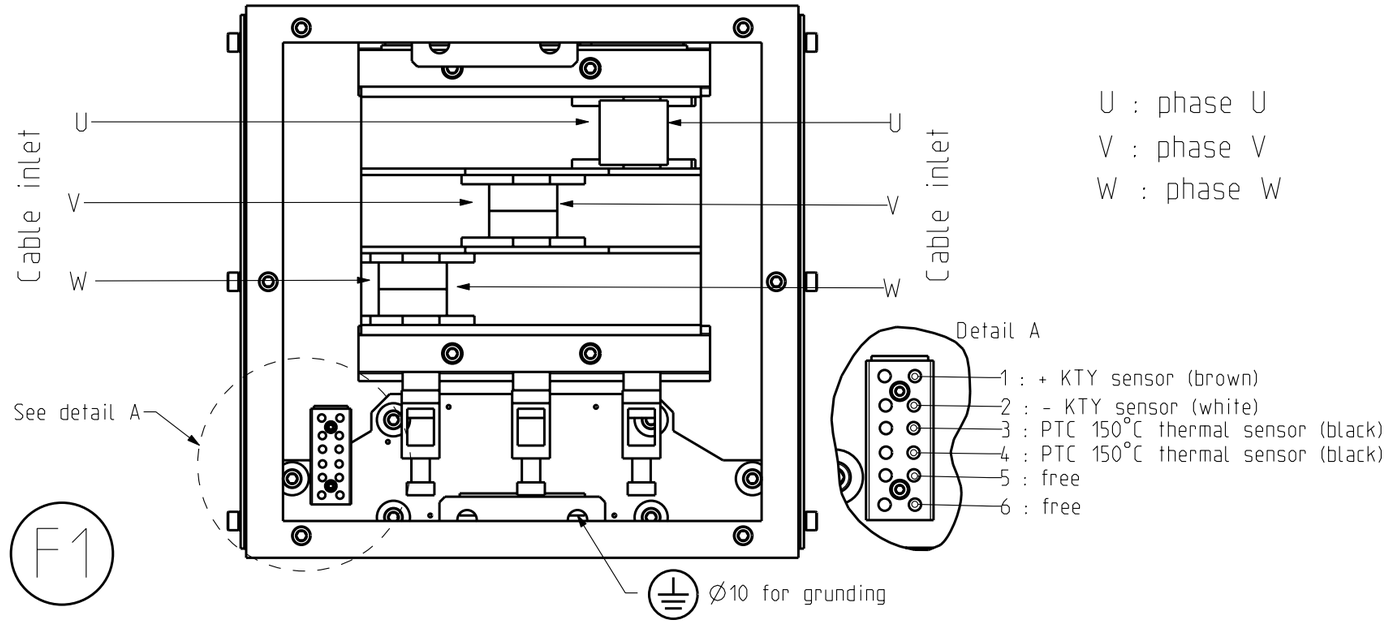

-Terminal box for current < 320 A, the maxi cable cross section is between 95 to 185 mm²
-Terminal box for current between 320 to 560 A, the maxi cable cross section is between 150 to 300 mm²

Drawing valid for : MGVB30

Weight :

This document is the property of PARKER.Transmission as well as reproduction or copy is not permitted without written authorisation.

General tolerances DIN ISO 2768 mK

Drawn	05/10/15	AH	Visa				
Modifications							

Scale 1:5

Parker
8 Avenue du lac. BP30749
21007-DIJON cedex-FRANCE
www.parker.com

MGVB

OUTLINE DRAWING

Format	F	E	S	G	I
A3		x			

345344E6001