INVERTER DRIVE® SUPERMARKET

Parker AC10 Frequency Inverter (from 30kW)

Easy Start Guide

The Parker AC10 Frequency Inverter range is available to order from inverterdrive.com

This guide is intended to complement the user manual provided by the manufacturer.
It is provided as a basic introduction to the product for Inverter Drive Supermarket customers.
It should not be used as a replacement for the manual issued by the manufacturer.

This product is not a safety device. All safety considerations including but not limited to Emergency Stop provision should be assessed separately and are outside the scope of this guide.

Issue 3
20200513

Contents

Page 1	Contents
Page 2	Power and Motor Connections
Page 3	Motor Connections - Star and Delta
Page 4	Parameters - Overview
	Parameters to set before use
Page 5	How to set a Parameter value
Page 6	How to Operate the Inverter from the keypad
Page 7	How to enable Sensorless Vector mode
Page 8	How to connect and configure a Potentiometer for remote speed control
Page 9	How to connect and configure a Run Forward or Run Reverse switch
Page 10	How to connect and configure a Run/Stop switch with Forward/Reverse selection
Page 11	How to configure “3-Wire” control with Run/Stop pushbuttons and Forward/Reverse selection
Page 12	Brake Resistor Connection
Page 13	How to Reset the Inverter to Factory Defaults

This guide has been produced by The Inverter Drive Supermarket Ltd.
All content, including but not limited to graphics, text and procedures copyright © The Inverter Drive Supermarket and must not be reproduced or altered without prior written permission.

1. Power and Motor Connections

Before commencing, confirm that the Inverter and all cables are completely isolated from the power supply, have been isolated for at least 5 minutes and that the motor is not turning.

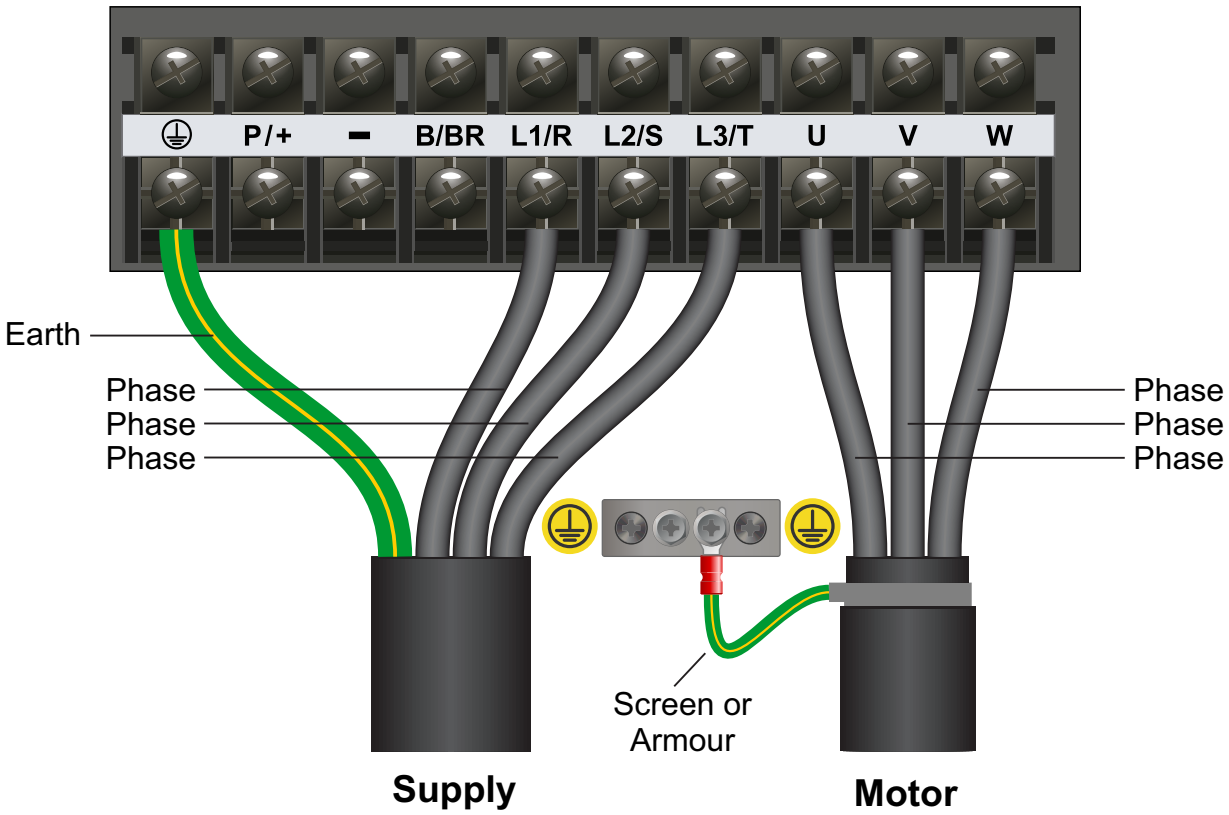

Notes:

The illustration on the left is based on the 30kW 400V model. The terminal layout for other ratings is similar.

The order of the three supply phases is not important.

The order of the three motor phases determines the initial direction the motor turns. This can be reversed by physically swapping any two motor phases. Or by changing the Inverter parameters.

Important:

Use screened or armoured cable between the Inverter and Motor. To minimise electromagnetic interference, ensure the cable screen is grounded as shown.

The motor must be separately earthed.

The supply must match the Inverter specification.

This guide has been produced by The Inverter Drive Supermarket Ltd.
All content, including but not limited to graphics, text and procedures copyright © The Inverter Drive Supermarket and must not be reproduced or altered without prior written permission.

2. Motor Connections - Star and Delta

Dual voltage induction motors typically include terminal boxes with six points. The points can be connected together with links in one of two ways to suit one of the two rated voltages.

The two ways of connecting the links are shown below. These are known as “Star” (the higher voltage) or “Delta” (the lower voltage).

The selection of Star or Delta is not optional and must match the supply voltage.

Dual voltage motor nameplates include symbols to represent voltage and full load current in each configuration.
Delta is represented by a triangle and star by a Y (Wye).

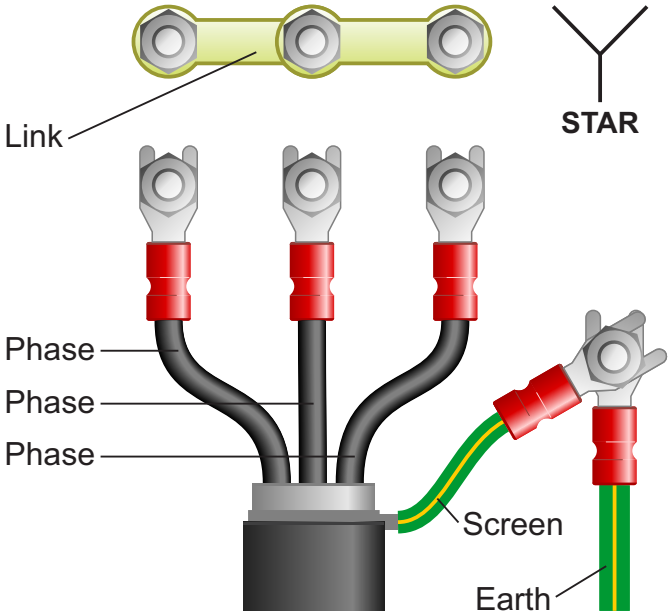

2.1 Motor connected in STAR (or Wye):

For safety purposes, Star (shown opposite) is the default configuration for small motors (usually to 3kW) and is sometimes known as “two at one side”.

Only two links are required for Star. Double-up the links if changing from Delta to allow the motor to be changed back in future.

The order of the three phases determines the direction the motor turns.

Note that the manufacturer recommends that the cable screen is earthed at both ends and the motor and Inverter are earthed separately.

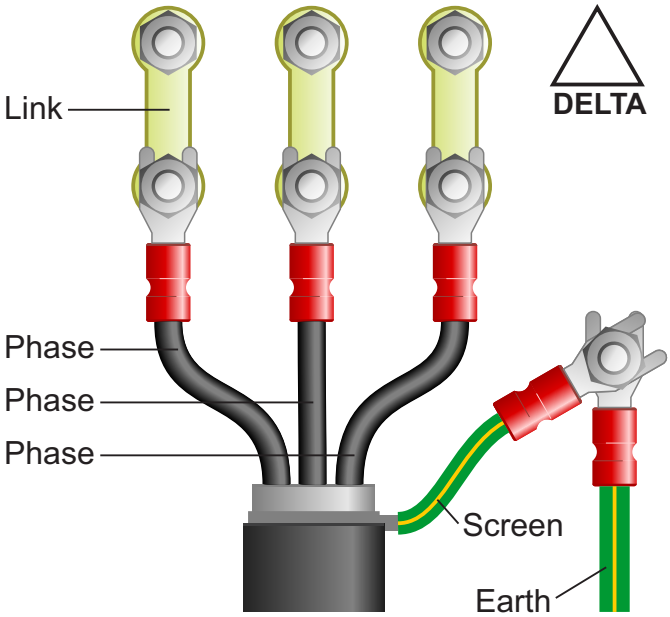

2.2 Motor connected in DELTA:

The link configuration is shown in the illustration opposite and is sometimes referred to as “three-a-breast”.

The order of the three phases determines the direction the motor turns.

Note that the manufacturer recommends that the cable screen is earthed at both ends and the motor and Inverter are earthed separately.

This guide has been produced by The Inverter Drive Supermarket Ltd.
All content, including but not limited to graphics, text and procedures copyright © The Inverter Drive Supermarket and must not be reproduced or altered without prior written permission.

3. Parameters - overview

The Inverter contains a number of settings which can be changed to tailor it for use in a wide range of applications. These settings are known as parameters.

Parameters are typically referred to by code or number (eg. F803 = Rated Motor Current) with a description available in the manual.

The parameters contain critical information essential to the correct operation of the Inverter. Therefore, they should at least be checked by the user before the Inverter is operated for the first time.
The parameters listed in section 4 are intended to provide a starting point to allow for basic operation of the AC10 Inverter.

4. Parameters to set before use

Set the following parameters to allow the AC10 to control a motor with Run, Stop and Speed Control from the keypad.

If any of the parameters have been changed previously, follow the procedure in section 13 to reset the Inverter to Factory Defaults.

See section 5 to learn how to set a parameter value.

4.1 Parameters to check and values to set

Parameter	Description	How to set
F111	Maximum Frequency (Hz)	Maximum frequency for the Inverter. Default is **50** which suits most applications. If you are unable to reduce this value, reduce F113 first.
F112	Minimum Frequency (Hz)	Minimum frequency for the Inverter. Default is **0.5** which suits most applications.
F114	First Acceleration Time (s)	Default is **30** seconds; increase or decrease if faster or slower acceleration is required.
F115	First Deceleration Time (s)	Default is **30** seconds; increase or decrease if faster or slower deceleration is required.
F137	Torque Compensation Mode	Default is **0** (linear); can be set to 1 for square (centrifugal fan and pump applications).
F153	Carrier Frequency (Hz)	Setting is rating dependent. Only change if required; default will suit most applications.
F200	Start Command Source	Default is **4** for keypad + terminal + MODBUS (any input source).
F201	Stop Command Source	Default is **4** for keypad + terminal + MODBUS (any input source).
F203	Frequency Command Source (desired motor speed in Hz)	Default is **0** (memory) which is set by parameter F113; F113 is adjusted by the keypad and stored. No need to change either F113 or F203.
F209	Stopping Mode	Default is **0**, ramped stop. Change to 1 for coast stop; this may suit some fan loads.
F220	Frequency Memory	Default is **0**; can be set to 1 to store the keypad setpoint (F113) during power down.
F228	Application Selection	Default is **0**; will suit most applications. 5 different application Macros available. Defaults below are based on F228 = 0.
F801	Rated Motor Power (kW)	Rated kW of the motor. Set to match the motor nameplate eg. **2200** (2.2kW).
F802	Rated Motor Voltage (V)	Rated Voltage of the motor. Set to match the motor nameplate eg **230** V.
F803	Rated Motor Current (A)	Rated current of the motor. Set to match the motor nameplate eg **2.4** A.
F805	Base Motor rpm	Rated rpm of the motor. Set to match the motor nameplate eg **1460** rpm (min-1). Once this is set, read-only parameter F804 (number of motor poles) will be recalculated.
F810	Motor rated Freq	Rated frequency of the motor. Default is **50** Hz; change to suit the motor.

This guide has been produced by The Inverter Drive Supermarket Ltd.
All content, including but not limited to graphics, text and procedures copyright © The Inverter Drive Supermarket and must not be reproduced or altered without prior written permission.

5. How to set a Parameter value

5.1 Press “M” key to access parameters.

With the motor stopped, press the “M” key repeatedly until the parameter list is shown.

The parameter list is prefixed with “F” as illustrated (left).

5.2 Select the required parameter “group”.

Press the “0” (stop) key to select the first (left) digit. This represents the parameter group (F100, F200, F800 etc.)

Use the up and down keys to select parameter group F800.

Note: In parameter “group” mode, the “DGT” (digit) lamp is not illuminated.

5.3 Select the required parameter.

Press the “0" (stop) key to select the last two (right) digits. This represents the parameters within the group.

Use the up and down keys to select parameter F803 (Rated Motor Current in Amps). Press the “E” key to edit the parameter value.

Note: In parameter mode, the “DGT” (digit) lamp is illuminated.

5.4 Change the parameter value and save.

The display will show the current parameter value. Use the “0" (stop) key to select a digit (it will flash when selected). Use the up and down keys to increase or decrease the value as required. In this example we will set the value to 2.4.

Press the “E” key to save the new value. The display will return to the parameter list as illustrated in 6.3 above.

This guide has been produced by The Inverter Drive Supermarket Ltd.
All content, including but not limited to graphics, text and procedures copyright © The Inverter Drive Supermarket and must not be reproduced or altered without prior written permission.

6. How to operate the Inverter from the keypad

6.1 Select the speed reference.

Press the “M” key repeatedly until the speed reference is shown - the “Frq” lamp will illuminate. The default is 50.00 (Hz). All digits will flash except the currently-selected digit. It is the digit that is not flashing that can be changed.

6.2 Set the desired speed.

Use the “0" (stop) key to move between digits. Use the up and down arrow keys to change the value as required.

Note: Once the value is changed it is saved automatically. There is no need to “save” the value.

6.3 Press the green “RUN” key to start the motor.

The green key will start the motor. The display will reset to 0.00 and increase as the motor accelerates. The time taken for the motor to accelerate to the desired speed (in seconds) is proportional to parameter F114. The “RUN” indicator will illuminate to indicate that the motor is running. To change the speed whilst the motor is running, use the up and down keys.
Note: When running, the “M” key can be used to cycle through other values such as motor rpm, current (A) and voltage (U).

6.4 Press the red “Stop” key to stop the motor.

The red key will stop the motor. The time taken (in seconds) to stop the motor is proportional to parameter F115.

Once the motor is stopped, the run lamp will not be illuminated and the display will return to the flashing setpoint shown in 7.2 (above).

This guide has been produced by The Inverter Drive Supermarket Ltd.
All content, including but not limited to graphics, text and procedures copyright © The Inverter Drive Supermarket and must not be reproduced or altered without prior written permission.

7. How to enable Sensorless Vector mode

The standard motor control mode of the AC10 Inverter is VxF. This simple mode controls motor speed by varying Volts and Frequency in a specific ratio to maintain output torque.

The AC10 can also operate in Sensorless Vector mode. This can improve motor performance without requiring a separate feedback device. Sensorless Vector mode operates in the same way as VxF but performs a number of calculations to improve low speed torque.

These calculations require a rotating "autotune" run with bare shaft during which the Inverter operates for approx. 10s to gather the necessary data.
For loads that cannot be decoupled from the motor, a stationary Autotune is possible but requires parameter F809 to be set manually. A rotating Autotune is therefore the preferred option.
To enable sensorless vector control first set the parameter values specified in 7.1 and then follow the steps described in 7.2 and 7.3.

7.1 Parameters to check prior to an Autotune.

Parameter	Description	How to set
F801	Rated Motor Power (kW)	Rated kW of the motor. Set to match the motor nameplate eg. **30.0** (30kW)
F802	Rated Motor Voltage (V)	Rated Voltage of the motor. Set to match the motor nameplate eg **400** V
F803	Rated Motor Current (A)	Rated current of the motor. Set to match the motor nameplate eg **55.2** A
F805	Base Motor rpm	Rated rpm of the motor. Set to match the motor nameplate eg **1460** rpm (min-1) Once this is set, read-only parameter F804 (number of motor poles) will be recalculated.

7.2 Start Autotune.

Once the parameters in 7.1 have been set, select parameter F800 and press "E" to edit the value. Change the value to 1. The value will flash. Press "E" again to save. The display will return to F800.

Ensure that the motor is decoupled from the load before pressing the green "I" (start) button to begin the autotuning process. This will take approx. 10 seconds during which the "run" lamp will illuminate and the motor will accelerate and decelerate.

7.3 The Autotune process.

During the autotuning process, the display will show "TEST".
When the process is complete the motor will stop, the "run" lamp will no longer be illuminated and the display will return to the speed reference. The results are saved in parameters F806 to F809 but sensorless vector mode is not enabled automatically.

Important: To enable sensorless vector mode once the autotune is complete set parameter F106 to 0.

This guide has been produced by The Inverter Drive Supermarket Ltd.
All content, including but not limited to graphics, text and procedures copyright © The Inverter Drive Supermarket and must not be reproduced or altered without prior written permission.

8. How to connect and configure a Potentiometer for remote speed control

If speed control via the integrated keypad is unsuitable for the application, a remote Potentiometer can be used instead.
This provides the benefit of allowing motor speed to be controlled from a more convenient location such as a cabinet door (if the AC10 is cabinet-mounted) or on the machine itself.

Any potentiometer rated from 2kOhm to 5kOhm can be used - eg. **4.7kOhm**.

The number of turns depends on the application. A single turn Potentiometer is available from The Inverter Drive Supermarket at InverterDrive.com.

8.1 Parameters to change for remote Potentiometer speed control

Parameter	Description	How to set
F203	Main frequency source X	Default is 0. Set to **1** to enable frequency setpoint via AI1 (Analogue Input 1).
F400	Lower limit of AI1 input (V)	The default value of **0** Volts should be suitable for most applications.
F401	Setting for lower limit of AI1	Min AI1 frequency as a factor of F111. If F111 = 50Hz, 1 = 0Hz, 1.1 = 5Hz, 1.2 = 10Hz etc.
F402	Upper limit of AI1 input (V)	The default value of **10** Volts should be suitable for most applications.
F403	Setting for upper limit of AI1	Max AI1 frequency as a factor of F111. If F111 = 50Hz, 1.5 = 25Hz, 1.8 = 40Hz, 2 = 50Hz etc.

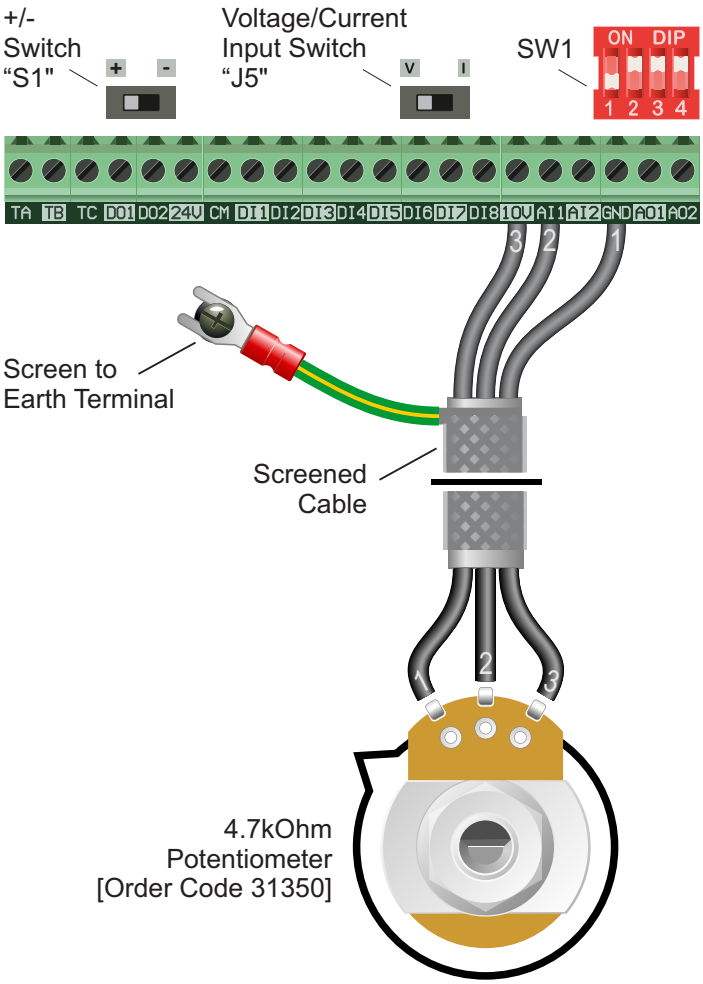

8.2 Connecting the Potentiometer

First, ensure the Voltage/Current switch "J5" is set to "V" (Voltage) and the +/- switch "S1" is set to "+". Then, set SW1 switches 1 and 3 to off/on (down/up) for 0-10V AI1 operation.

A wiring diagram is shown in the illustration opposite. The most important connection at the Potentiometer end is the centre terminal or "wiper". The wiper will output a variable voltage between 0 and 10 Volts and should be connected to the "AI1" terminal on the Inverter. It is this voltage which provides the speed signal with 0V being slowest and 10V fastest.

If the rotation of the Potentiometer is the opposite to that required (ie. turn anti-clockwise to increase speed instead of clockwise) reverse connections GND and 10V.

Use shielded cable between Potentiometer and Inverter and ensure that the cable screen is connected to the Inverter earth terminal only.

Note: Do not set min AI1 frequency (F401) at a lower value than min Inverter frequency (F112).

This guide has been produced by The Inverter Drive Supermarket Ltd.
All content, including but not limited to graphics, text and procedures copyright © The Inverter Drive Supermarket and must not be reproduced or altered without prior written permission.

9. How to connect and configure a Run Forward or Run Reverse switch

The procedure described in section 6 enables Run/Stop operation via the red and green buttons on the Inverter keypad.

If this is unsuitable for the application, a remote switch can be used instead.

This section explains how to enable 2-wire control with Run Forward / Stop / Run Reverse commands via a single selector switch.
When set to operate in this way, the Inverter can no longer be operated via the integrated keypad.

9.1 Parameters to change for remote Run/Stop

Parameter	Description	How to set
F208	Two-line/three-line control	Set to **1** (2 wire control; run fwd, run rev)
F318	DI3 terminal function setting	Default is 15 ; set to **15** to select Run Fwd
F319	DI4 terminal function setting	Default is 16; set to **16** to select Run Rev

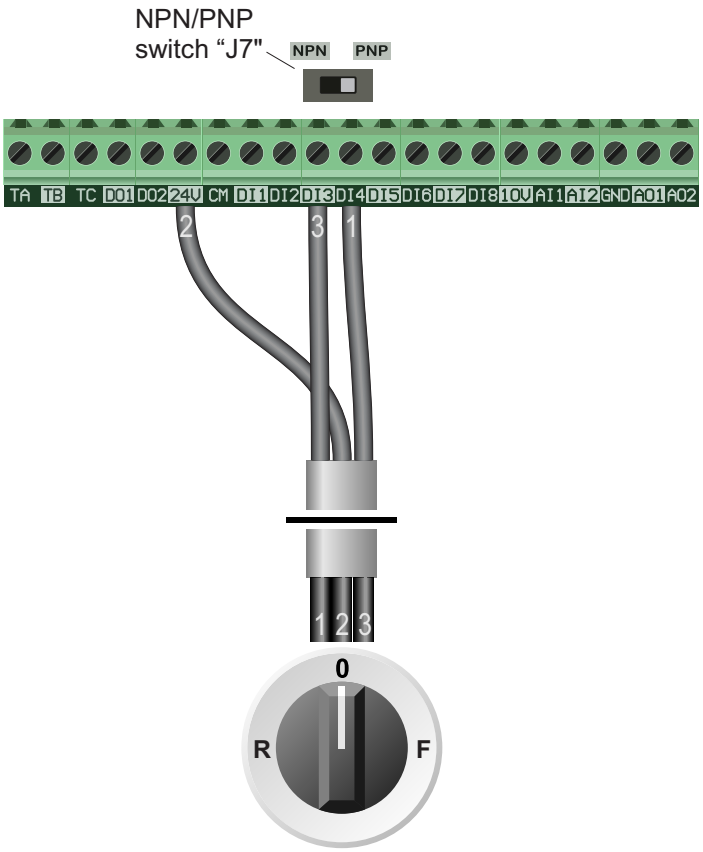

Switch, 3 Position
Normally Open
“Run Forward / Stop / Run Reverse”

9.2 Connecting the Switch

A wiring diagram is shown in the illustration opposite.

When the NPN/PNP jumper is set to PNP (the default), the 24V terminal is a common connection for the digital terminals (terminals prefixed with “D”). If you prefer to set the jumper to NPN, use CM as the common instead.

A suitable 3 position NO (Normally Open) switch should be installed between terminals 24V, DI3 and DI4. The centre position should remain open circuit.

When a connection is made between terminals 24V and DI3, the motor will run forward. When terminals 24V and DI4 are connected, the motor will run in reverse. The selected direction of rotation is indicated by the “FWD” lamp on the Inverter.

If terminals DI3 and DI4 are connected to 24V at the same time the motor will stop.

Note: the “FWD” lamp will flash to indicate that the Inverter is waiting for a direction command. This is normal.

This guide has been produced by The Inverter Drive Supermarket Ltd.
All content, including but not limited to graphics, text and procedures copyright © The Inverter Drive Supermarket and must not be reproduced or altered without prior written permission.

10. How to connect and configure a Run/Stop switch with Forward/Reverse selection

The procedure described in section 6 enables Run/Stop operation via the red and green buttons on the Inverter keypad.

If this is unsuitable for the application, remote switches can be used instead.

This section explains how to enable 2-wire control with Run/Stop and Forward/Reverse commands via separate selector switches.
When set to operate in this way, the Inverter can no longer be operated via the integrated keypad.

10.1 Parameters to change for remote Run/Stop

Parameter	Description	How to set
F208	Two-line/three-line control	Set to **2** (2 wire control; run/stop with reverse select)
F318	DI3 terminal function setting	Default is 15 ; set to **15** to select Run Fwd
F319	DI4 terminal function setting	Default is 16; set to **16** to select Run Rev

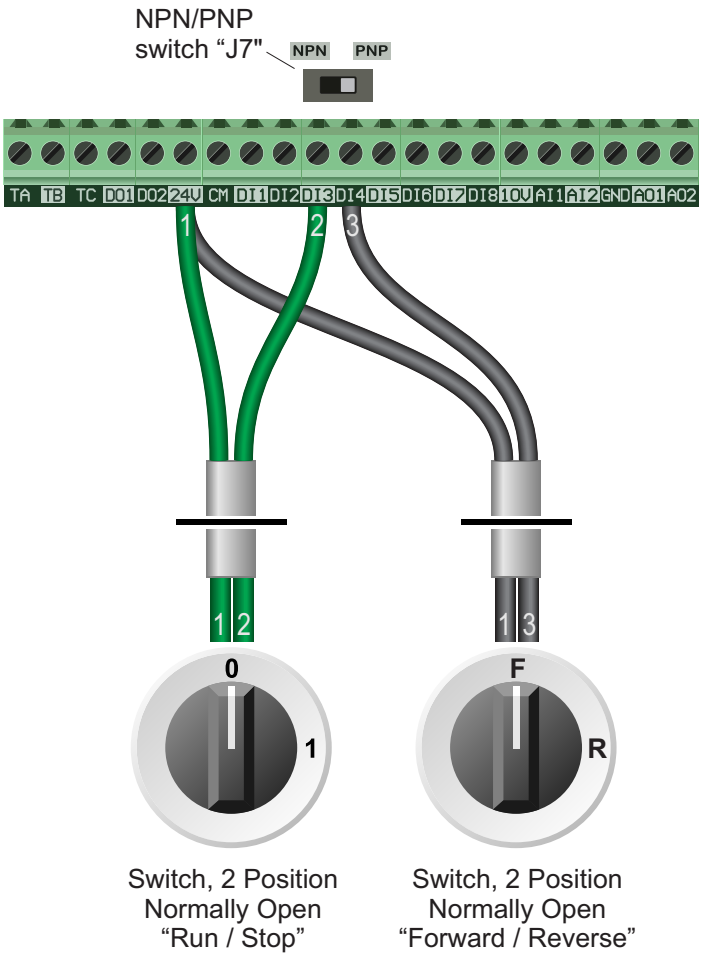

10.2 Connecting the Switches

A wiring diagram is shown in the illustration opposite.

When the NPN/PNP jumper is set to PNP (the default), the 24V terminal is a common connection for the digital terminals (terminals prefixed with "D"). If you prefer to set the jumper to NPN, use CM as the common instead.

Two suitable 2 position NO (Normally Open) switches should be installed: One between terminals 24V and DI3 (Run / Stop) and the other between terminals 24V and DI4 (Forward / Reverse).

Note that the Forward/Reverse switch only selects the direction of rotation - it will not start or stop the motor. The direction can be set either before the motor is started or whilst it is running and is indicated by the "FWD" lamp on the Inverter.

If the application only requires the motor to turn in one direction, the Forward/Reverse switch can be omitted.

This guide has been produced by The Inverter Drive Supermarket Ltd.
All content, including but not limited to graphics, text and procedures copyright © The Inverter Drive Supermarket and must not be reproduced or altered without prior written permission.

11. How to configure “3-Wire” control with Run/Stop pushbuttons and Forward/Reverse selection

The procedure described in section 6 enables Run/Stop operation via the red and green buttons on the Inverter keypad.

If this is unsuitable for the application, remote switches can be used instead.

This section explains how to enable 3-wire control with Run and Stop via pushbuttons and Fwd/Rev via a selector switch.
When set to operate in this way, the Inverter can no longer be operated via the integrated keypad.

11.1 Parameters to change for remote 3-wire control

Parameter	Description	How to set
F208	Two-line/three-line control	Set to **4** (3 wire control; momentary start/stop with reverse select)
F317	DI2 terminal function setting	Default is 9; set to **17**; Stop (NC; pulse close to stop)
F318	DI3 terminal function setting	Default is 15; set to **15**; Run (NO; pulse close to start)
F319	DI4 terminal function setting	Default is 16; set to **16**; Reverse Select (Open = Forward; Closed = Reverse)

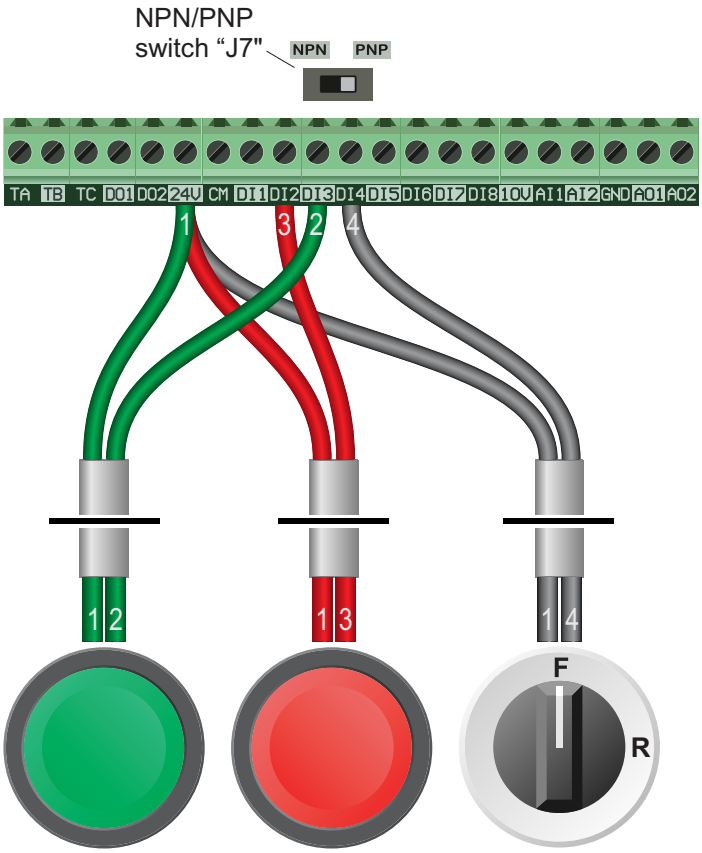

Pushbutton Normally Open “Run”

Pushbutton Normally Closed “Stop”

Switch, 2 Position Normally Open “Forward / Reverse”

11.2 Connecting the Switches

When the NPN/PNP jumper is set to PNP (the default), the 24V terminal is a common connection for the digital terminals (terminals prefixed with “D”). If you prefer to set the jumper to NPN, use CM as the common instead.

For “Run” and “Stop”, two suitable pushbuttons should be installed. The “Run” pushbutton should include a Normally Open contact between terminals DI3 and 24V and the “Stop” a Normally Closed contact between DI2 and 24V. A momentary connection between DI3 and 24V will start the motor. It will continue to run until the connection between DI2 and 24V is broken.

For “Forward/Reverse” a suitable 2 position NO (Normally Open) switch should be installed between DI4 and 24V.

Note that the Forward/Reverse switch can be used to set the direction when the motor is stopped or running. If the motor is running and the direction is changed the Inverter will first decelerate the motor to zero speed before accelerating up to the speed setpoint in the opposite direction.

The direction of rotation is indicated by the “FWD” lamp on the Inverter.

This guide has been produced by The Inverter Drive Supermarket Ltd.
All content, including but not limited to graphics, text and procedures copyright © The Inverter Drive Supermarket and must not be reproduced or altered without prior written permission.

12. Brake Resistor Connection

Before commencing, confirm that the Inverter and all cables are completely isolated from the power supply, have been isolated for at least 5 minutes and that the motor is not turning.

High inertia loads can cause overvoltage trips during deceleration and lead to “O.E." error messages. In many cases, the solution is to increase the deceleration time to compensate.

However, if the application requires it, dynamic braking can be enabled to maintain or reduce deceleration times by absorbing the energy generated by such loads.

A Brake Resistor is first installed to absorb braking energy and dissipate it as heat. The resistor must be correctly sized for both the Inverter and application.

The “brake chopper” within the Inverter detects excessive braking energy and redirects it to the resistor when required.

12.1 Parameters to check for Dynamic Braking

Parameter	Description	How to set
F611	Dynamic Braking threshold	Default is dependant on rating. Should not need to be changed.
F612	Dynamic braking duty ratio (%)	Default is **80** % (or 100 %). Should be suitable for most applications.
F622	Dynamic braking mode	Default is **1** for “Auto duty ratio”. Should be suitable for most applications.

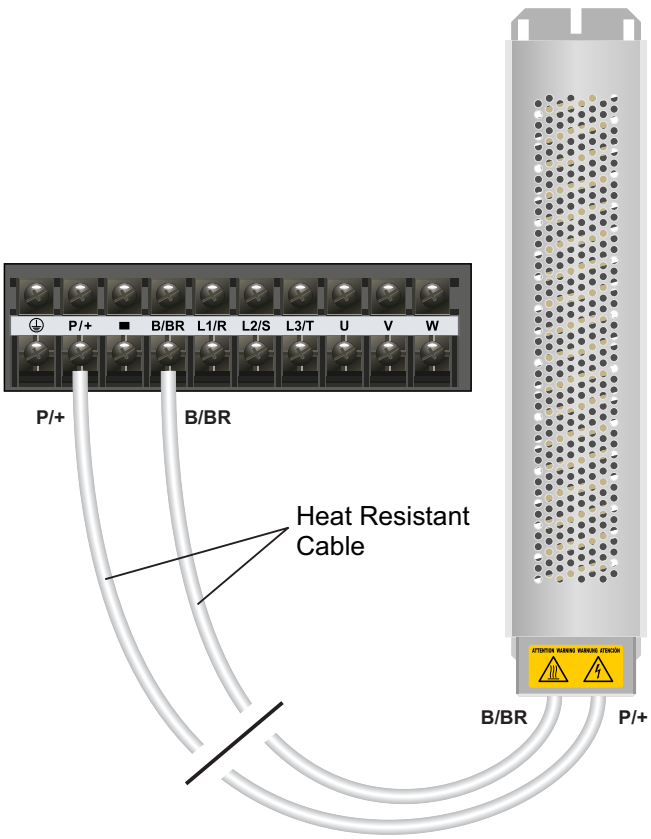

12.2 Connecting the Resistor

A wiring diagram is shown in the illustration opposite. Connect the brake resistor to the P/+ and B/BR terminals on the Inverter. The order of the connections is unimportant.

The braking resistor may get hot during operation. Ensure that it is suitably-mounted so any heat generated will not affect other equipment. Some resistors may include a thermal relay for additional protection.

It is essential that a resistor of the correct rating is used. Consult the Inverter product listing at InverterDrive.com or manual issued by the manufacturer for details.

Note: Ensure that the resistor is connected between the “P/+” and “B/BR” terminals. If the resistor is connected to any other terminals the Inverter may be damaged.

This guide has been produced by The Inverter Drive Supermarket Ltd.
All content, including but not limited to graphics, text and procedures copyright © The Inverter Drive Supermarket and must not be reproduced or altered without prior written permission.

13. How to reset the Inverter to Factory Defaults

13.1 Select parameter list.

With the motor stopped, press the “M” key repeatedly until the parameter list is shown.

The parameter list is prefixed with “F” as illustrated (left).

13.2 Select parameter “group” 1.

Press the “0” (stop) key to select the first (left) digit. This represents the parameter group (F100, F200, F800 etc.)

Use the up and down keys to select parameter group F100.

Note: In parameter “group” mode, the “DGT” (digit) lamp is not illuminated.

13.3 Select parameter F160.

Press the “0" (stop) key to select the last two (right) digits. This represents the parameters within the group.

Use the up and down keys to select parameter F160. Press the “E” key to edit the parameter value.

Note: In parameter mode, the “DGT” (digit) lamp is illuminated.

13.4 Set the value to 1 and save.

The initial value of 0 is displayed. Use the up and down keys to change this to 1.

Press the “E” key to save the new value. The display will stop flashing and may briefly go blank.

Once the reset is complete the display will return to the parameter list. The factory reset is complete.

This guide has been produced by The Inverter Drive Supermarket Ltd.
All content, including but not limited to graphics, text and procedures copyright © The Inverter Drive Supermarket and must not be reproduced or altered without prior written permission.