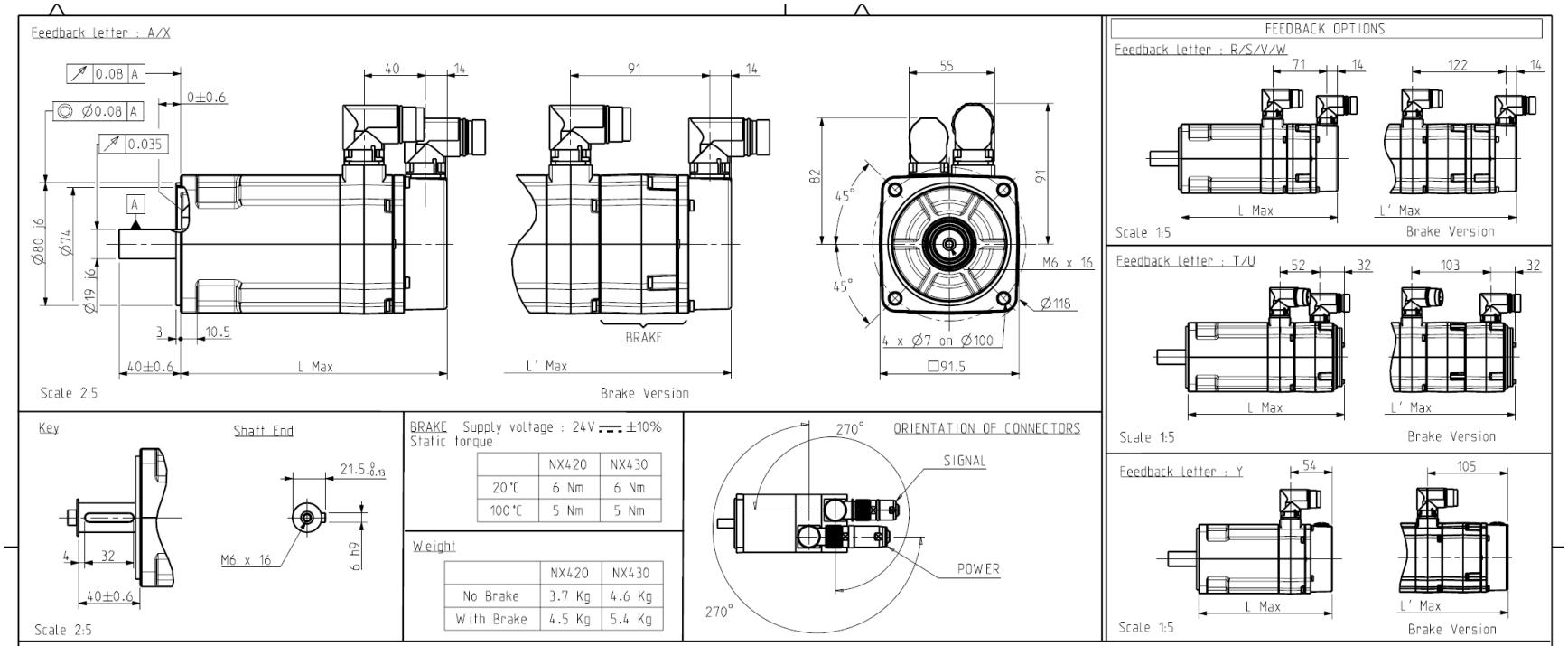

	Static torque	NX420	NX430
	20°C	6 Nm	6 Nm
	100°C	5 Nm	5 Nm

	Weight	NX420	NX430
	No Brake	3.7 Kg	4.6 Kg
	With Brake	4.5 Kg	5.4 Kg

	Feedback options (feedback letter)	Resolver (A)	Low cost encoder (X)	Hiperface SKS36 (R)	Hiperface SKM36 (S)	Endat ECN1113 (V)	Endat EQN1125 (W)	Hiperface SRS50 (T)	Hiperface SRM50 (U)	Sensorless (Y)
NX420	L (mm)	175		206				205		175
NX420	L' (mm)	226		261				256		226
NX430	L (mm)	200		231				230		200
NX430	L' (mm)	251		286				281		251

N X 4 _ _ E _ _ R 7 _ _ _

- Torque range (depends on length)
- Winding (depends on speed)
- A : Resolver
- R : Hiperface Singleturn SKS36
- S : Hiperface Multiturn SKM36
- T : Hiperface Singleturn SRS50
- U : Hiperface Multiturn SRM50
- V : Endat Singleturn ECN1113
- W: Endat Multiturn EQN1125
- X : Low Cost Encoder
- Y : Sensorless
- 0 : Without Brake
- 3 : Brake
- * : Thermal protection options on drawing 344993
- 0 : IP 64
- 1 : IP 65
- 0 : Plain Shaft
- 1 : key

See connectors pin out and encoder settings on drawing 344993

Sheet : 1/4

This document is the property of PARVEX Transmission as well as reproduction or copy is not permitted without written authorisation.	General tolerances DIN ISO 2768 mK	Drawn	03/07/09	OD	Visa					Scale 2:5	Parker 8 Avenue du Lac. BP249. 21007-DIJON cedex-FRANCE www.SSDdrives.com	NX400 CONNECTOR VARIANT	Format A3	F	E	S	G	I
		Modifications C	AM 24108 22/04/13 SD												x			
		B	AM23403 10/05/10 OD										344178					C
		A	AM23337 15/02/10 OD															