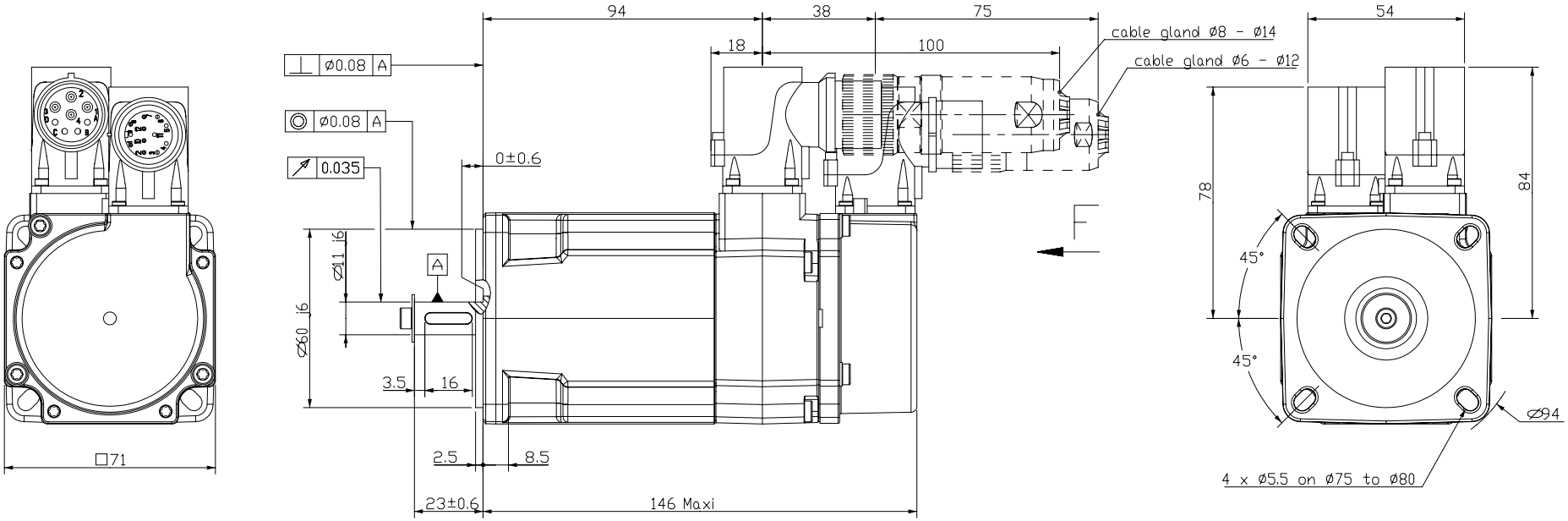


POWER CONNECTOR

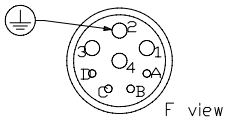


1 : Phase U
2 : Ground
3 : Phase W
4 : Phase V
A : No connection
B : No connection
C, D : Temperature sensor (option)

FEEDBACK CONNECTOR

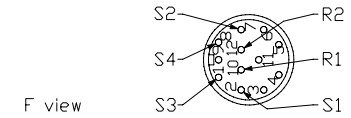


RESOLVER

Feed frequency..... : 8 kHz
Supply voltage..... : 7 V RMS
Input current..... : 70 mA Maxi
Max. electrical error..... : 20' Maxi
Transformation ratio..... : 0.5 typical
Phase shit..... : 20° Maxi
Polarity..... : 1 pair of poles

RELUCTANCE SENSOR

Feed frequency..... : 8 kHz
Input voltage..... : 7 V RMS
Input current..... : 71 mA Maxi
Max. electrical error..... : 8' Maxi
Transformation ratio..... : 0.33 typical
Phase shift..... : 15° Maxi
Polarity..... : 5 pairs of poles

ORIENTATION OF CONNECTORS

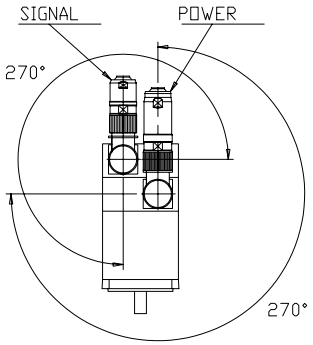


SHAFT END

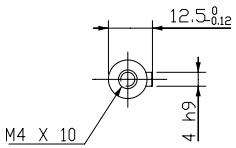


Drawing valid for : R7001

Weight :

This document is the property of PARVEX.Transmission as well as reproduction or copy is not permitted without written authorisation.

| | | | | |
|---|---|---|---|---|
| Drawn | 04/05/00 | RP | Visa | |
| Modifications | c | AM 21110 23/07/02 SP | | |
| | b | AM 20589 10/01/01 PB | | |
| | a | AM 20315 07/07/00 DL | d | AM 21359 02/04/03 NV |

Scale 7:10

PARVEX
8 Avenue du lac. BP249
21007-DIJON cedex-FRANCE
www.parvex.com

NX300

OUTLINE DRAWING

| Format | F | E | S | G | I |
|---|---|---|---|---|---|
| A3 | × | × | | | |

344167E7001 d