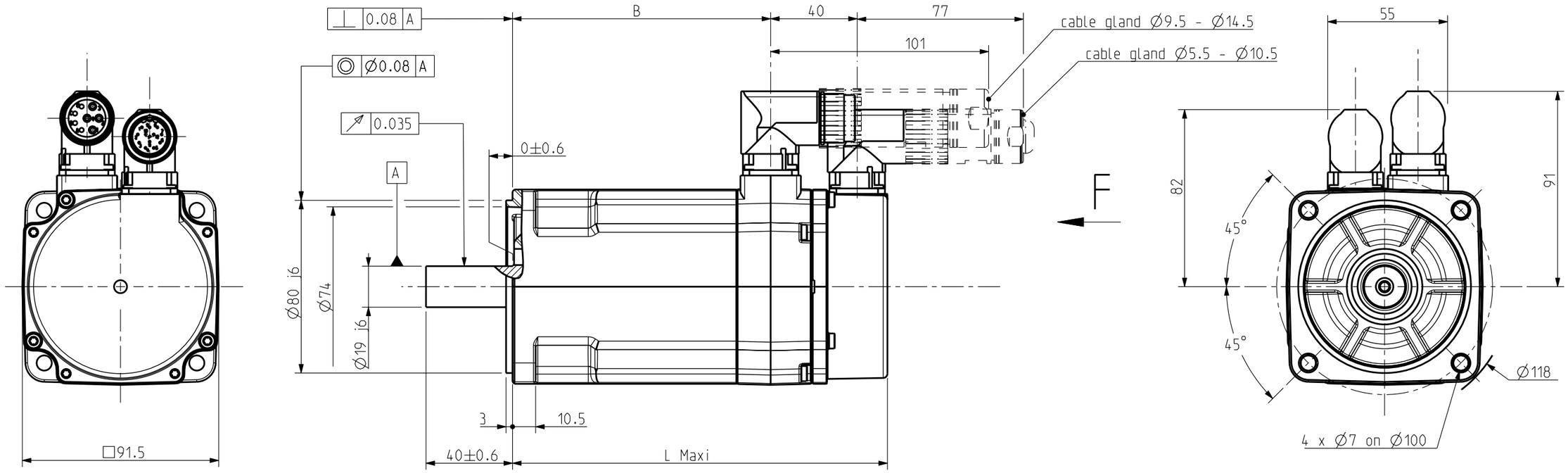

POWER CONNECTOR

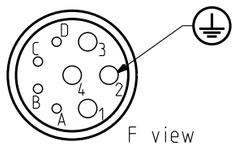

1 : Phase U
2 : Ground
3 : Phase W
4 : Phase V
A : No connection
B : No connection
C, D : No connection

FEEDBACK CONNECTOR

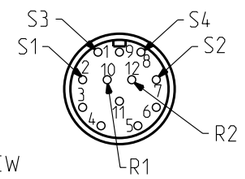

ORIENTATION OF CONNECTORS

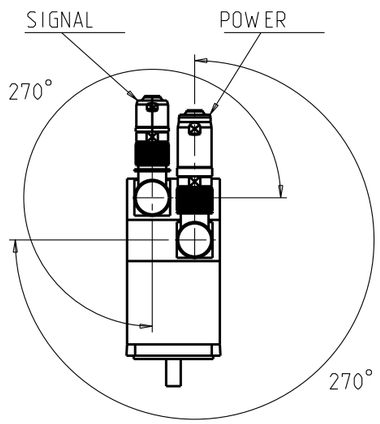

SHAFT END

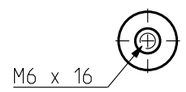

DIMENSIONS

	NX420	NX430
L Maxi	175	200
B	120	145

Weight :

This document is the property of PARVEX.Transmission as well as reproduction or copy is not permitted without written authorisation.

Drawn	16/12/99	JMB	Visa		
Modifications c	AM 21012 19/03/02 RG		f	AM 21992 08/06/05 YG	
Modifications b	AM 20589 05/01/01 RG		e	AM 21359 02/04/03 NV	
Modifications a	AM 20366 02/11/00 PR		d	AM 21117 21/08/02 SP	

Scale 1:2

SSD DRIVES
PARVEX
8 Avenue du lac. BP249
21007-DIJON cedex-FRANCE
www.parvex.com

NX400

OUTLINE DRAWING

Format	F	E	S	G	I	
A3	x	x				

344178AE7000 f